SUNGROW
Clean power for all

User Manual

3–Phase Hybrid Inverter

SH5.0RT/SH6.0RT/SH8.0RT/SH10RT/SH5.0RT-20/
SH6.0RT-20/SH8.0RT-20/SH10RT-20

SH5.0–10RT&SH5.0–10RT-20-UEN-Ver25-202512

All Rights Reserved

All Rights Reserved

No part of this document can be reproduced in any form or by any means without the prior written permission of Sungrow Power Supply Co., Ltd (hereinafter "SUNGROW").

Trademarks

SUNGROW and other SUNGROW trademarks used in this manual are owned by SUNGROW.

All other trademarks or registered trademarks mentioned in this manual are owned by their respective owners.

Software Licenses

- It is prohibited to use data contained in firmware or software developed by SUNGROW, in part or in full, for commercial purposes by any means.
- It is prohibited to perform reverse engineering, cracking, or any other operations that compromise the original program design of the software developed by SUNGROW.

About This Manual

The manual mainly contains the product information, as well as guidelines for installation, operation, and maintenance. The manual does not include complete information about the photovoltaic (PV) system. Readers can get additional information at **www.sungrowpower.com** or on the webpage of the respective component manufacturer.

Validity

This manual is valid for the following model of low-power grid-connected PV string inverters:

- SH5.0RT
- SH6.0RT
- SH8.0RT
- SH10RT
- SH5.0RT-20
- SH6.0RT-20
- SH8.0RT-20
- SH10RT-20

It will be referred to as "inverter" hereinafter unless otherwise specified.

Target Group

This manual is intended for professional technicians who are responsible for installation, operation, and maintenance of inverters, and users who need to check inverter parameters.

The inverter must only be installed by professional technicians. The professional technician is required to meet the following requirements:

- Know electronic, electrical wiring and mechanical expertise, and be familiar with electrical and mechanical schematics.
- Have received professional training related to the installation and commissioning of electrical equipment.
- Be able to quickly respond to hazards or emergencies that occur during installation and commissioning.
- Be familiar with local standards and relevant safety regulations of electrical systems.
- Read this manual thoroughly and understand the safety instructions related to operations.

How to Use This Manual

Please read this manual carefully before using the product and keep it properly at a place for easy access.

All contents, pictures, marks, and symbols in this manual are owned by SUNGROW. No part of this document may be reprinted by the non-internal staff of SUNGROW without written authorization.

Contents of this manual may be periodically updated or revised, and the actual product purchased shall prevail. Users can obtain the latest manual from **support.sungrowpower.com** or sales channels.

Security Declaration

For details on the product's network security vulnerability response process and vulnerability disclosure, please visit the following website: https://en.sungrowpower.com/security-vulnerability-management.

For more information on network security, please refer to the user manual of the communication module or the Data Logger that comes with the product.

Symbols

This manual contains important safety instructions, which are highlighted with the following symbols, to ensure personal and property safety during usage, or to help optimize the product performance in an efficient way.

Please carefully understand the meaning of these warning symbols to better use the manual.

⚠ DANGER

Indicates high-risk potential hazards that, if not avoided, may lead to death or serious injury.

⚠ WARNING

Indicates moderate-risk potential hazards that, if not avoided, may lead to death or serious injury.

⚠ CAUTION

Indicates low-risk potential hazards that, if not avoided, may lead to minor or moderate injury.

NOTICE

Indicates potential risks that, if not avoided, may lead to device malfunctions or financial losses.

"NOTE" indicates additional information, emphasized contents or tips that may be helpful, e.g., to help you solve problems or save time.

Contents

All Rights Reserved.....I
About This Manual..... II
1 Safety Instructions.....1
1.1 Unpacking and Inspection..... 2
1.2 Installation Safety..... 3
1.3 Electrical Connection Safety.....3
1.4 Operation Safety.....5
1.5 Maintenance Safety.....6
1.6 Disposal Safety.....7
2 Product Description..... 8
2.1 System Introduction.....8
2.2 Product Introduction.....8
2.3 Symbols on the Product.....10
2.4 LED Indicator..... 11
2.5 DC Switch.....12
2.6 PV Energy Storage System (PV ESS).....12
2.6.1 PV ESS Introduction..... 12
2.6.2 Declaration For Backup Function.....14
2.6.3 Energy Management.....14
2.7 Parallel System.....16
2.7.1 Grid-connected Parallel System.....16
2.8 PV Storage and EV-Charging System.....17
2.9 Retrofitting the Existing PV System.....18
2.10 Retrofitted PV Storage and EV-Charging System..... 20
3 Function Description.....22
3.1 Safety Function.....22
3.1.1 Protection.....22
3.1.2 Earth Fault Alarm..... 22
3.2 Energy Conversion and Management..... 22
3.2.1 Power Derating..... 22
3.2.2 DRM (“AU”/“NZ”).....23
3.2.3 Regular Operational Voltage Range..... 24
3.2.4 Regular Operational Frequency Range..... 24
3.2.5 Reactive Power Regulation.....24

3.2.6 Load Control....24
3.3 Battery Management....26
3.3.1 Charge Management....28
3.3.2 Discharge Management....29
3.4 Communication and Configuration....29
3.5 EV Charger Management....29
4 Unpacking and Storage....30
4.1 Unpacking and Inspection....30
4.2 Scope of Delivery....31
4.3 Inverter Storage....32
5 Mechanical Mounting....34
5.1 Safety During Mounting....34
5.2 Location Requirements....35
5.2.1 Installation Environment Requirements....35
5.2.2 Carrier Requirements....36
5.2.3 Angle Requirements....37
5.2.4 Clearance Requirements....37
5.3 Installation Tools....38
5.4 Moving the Inverter....39
5.5 Installing the Inverter....40
6 Electrical Connection....42
6.1 Safety Instructions....42
6.2 Terminal Description....43
6.3 Electrical Connection Overview....46
6.4 External Protective Grounding Connection....51
6.4.1 External Protective Grounding Requirements....52
6.4.2 Connection Procedure....52
6.5 AC Cable Connection....53
6.5.1 AC Side Requirements....53
6.5.2 Assembling the AC Connector....54
6.5.3 Installing the AC Connector....56
6.6 DC Cable Connection....58
6.6.1 PV Input Configuration....59
6.6.2 Assembling the PV Connectors....60
6.6.3 Installing PV Connector....62
6.7 Communication Connection....63
6.7.1 Ethernet Connection....63
6.7.1.1 Assembling the LAN Connector....63
6.7.1.2 Installing the LAN Connector....64

6.7.2 WiNet-S Connection....65
6.7.2.1 Ethernet Communication....65
6.7.2.2 WLAN Communication....67
6.7.3 RS485 Connection....68
6.7.3.1 Assembling the COM Connector....68
6.7.3.2 Installing the COM Connector....69
6.8 Smart Energy Meter Connection....70
6.9 Battery Connection....73
6.9.1 Connecting the Power Cable....73
6.9.1.1 Assembling the SUNCLIX Connector....74
6.9.1.2 Installing the SUNCLIX Connector....75
6.9.1.3 Assembling Evo2 Compatible Connector....76
6.9.1.4 Installing Evo2 Compatible Connector....77
6.9.2 Connecting the CAN Cable....77
6.10 EV-Charger Communication Connection....77
6.11 DO Connection....78
6.12 DI Connection....79
6.12.1 Assembling the COM Connector....81
6.12.2 Installing the COM Connector....83
6.13 Backup Connection....83
7 Commissioning....86
7.1 Inspection Before Commissioning....86
7.2 Commissioning Procedure....86
7.3 App Preparation....87
7.4 Creating a Plant....87
8 iSolarCloud App....96
8.1 About iSolarCloud....96
8.2 Install iSolarCloud....97
8.3 User Roles....98
8.4 Device Commissioning....98
9 System Decommissioning....99
9.1 Decommissioning the Inverter....99
9.1.1 Disconnecting the Inverter....99
9.1.2 Dismantling the Inverter....99
9.1.3 Disposal of Inverter....100
9.2 Decommissioning the Battery....100
10 Troubleshooting and Maintenance....102
10.1 Troubleshooting....102
10.2 Maintenance....106

10.2.1 Maintenance Notices.....106
10.2.2 Routine Maintenance..... 108
10.2.3 Replacing the Button Cell.....108
10.2.4 Digital Signature Description.....108
11 Appendix.....109
11.1 Technical Data..... 109
11.2 The Compatibility for Backup under Off-grid Scenario.....125
11.3 Quality Assurance.....127
11.4 Contact Information.....128

1 Safety Instructions

When installing, commissioning, operating, and maintaining the product, strictly observe the labels on the product and the safety requirements in the manual. Incorrect operation or work may cause:

- Injury or death to the operator or a third party.
- Damage to the product and other properties.

⚠ WARNING

- **Do not perform any operation on the product (including but not limited to, handling, installing, powering on, or maintaining the product, performing electrical connection, and working at heights) in harsh weather conditions, such as thunder and lightning, rain, snow, and Level 6 or stronger winds. SUNGROW shall not be held liable for any damage to the device due to force majeure, such as earthquakes, floods, volcanic eruptions, mudslides, lightning strikes, fires, wars, armed conflicts, typhoons, hurricanes, tornadoes, and other extreme weathers.**
- **In case of fire, evacuate from the building or product area and call the fire alarm. Re-entry into the burning area is strictly prohibited under any circumstances.**

NOTICE

- **Tighten the screws with the specified torque using tools when fastening the product and terminals. Otherwise, the product may be damaged. And the damage caused is not covered by the warranty.**
- **Learn how to use tools correctly before using them to avoid hurting people or damaging the device.**
- **Maintain the device with sufficient knowledge of this manual and use proper tools.**

- The safety instructions in this manual are only supplements and cannot cover all the precautions that should be followed. Perform operations considering actual onsite conditions.
- SUNGROW shall not be held liable for any damage caused by violation of general safety operation requirements, general safety standards, or any safety instruction in this manual.
- When installing, operating, and maintaining the product, comply with local laws and regulations. The safety precautions in this manual are only supplements to local laws and regulations.
- During the product transport, installation, wiring, maintenance, etc., the materials and tools prepared by users must meet the requirements of applicable local laws and regulations, safety standards, and other specifications. SUNGROW shall not be held liable for any damage to the product caused by the adoption of materials and tools that fail to meet the above-mentioned requirements.
- Operations on the product, including but not limited to, handling, installing, wiring, powering on, maintenance, and use of the product, must not be performed by unqualified personnel. SUNGROW shall not be held liable for any damage to the product resulting from operations done by unqualified personnel.
- Where the transport of the product is arranged by users, SUNGROW shall not be held liable for any damage to the product that is caused by users themselves or the third-party transport service providers designated by the users.
- SUNGROW shall not be held liable for any damage to the product caused by the negligence, intent, fault, improper operation, and other behaviors of users or third-party organizations.
- SUNGROW shall not be held liable for any damage to the product arising from reasons unrelated to SUNGROW.

1.1 Unpacking and Inspection

⚠ WARNING

- **Check all safety signs, warning labels and nameplates on devices.**
- **The safety signs, warning labels and nameplates must be clearly visible and cannot be removed or covered before the device is decommissioned.**

NOTICE

After receiving the product, check whether the appearance and structural parts of the device are damaged, and check whether the packing list is consistent with the actual ordered product. If there are problems with the above inspection items, do not install the device and contact your distributor first. If the problem persists, contact SUNGROW in time.

1.2 Installation Safety

DANGER

- **Make sure there is no electrical connection before installation.**
- **Before drilling, avoid the water and electricity wiring in the wall.**

CAUTION

Improper installation may cause personal injury!

- **If the product supports hoisting transport and is hoisted by hoisting tools, no one is allowed to stay under the product.**
- **When moving the product, be aware of the product weight and keep the balance to prevent it from tilting or falling.**

NOTICE

Before operating the product, must check and ensure that tools to be used have been maintained regularly.

1.3 Electrical Connection Safety

DANGER

Before electrical connections, please make sure that the inverter is not damaged, otherwise it may cause danger!
Before electrical connections, please make sure that the inverter switch and all switches connected to the inverter are set to "OFF", otherwise electric shock may occur!

⚠ DANGER

The PV string will generate lethal high voltage when exposed to sunlight.

- **Operators must wear proper personal protective equipment during electrical connections.**
- **Must ensure that cables are voltage-free with a measuring instrument before touching DC cables.**
- **Respect all safety instructions listed in relevant documents about PV strings.**

⚠ DANGER

Danger to life due to a high voltage inside the inverter!

- **Be sure to use special insulation tools during cable connections.**
- **Note and observe the warning labels on the product, and perform operations strictly following the safety instructions.**
- **Respect all safety instructions listed in this manual and other pertinent documents.**

⚠ DANGER

If the battery is short-circuited, the instantaneous current will be excessively high and a large amount of energy will be released, which may cause fire and personal injury.
Disconnect the battery from all voltage sources prior to performing any work on the battery.
Lethal voltages are present at the battery terminals and cables connecting to the inverter. Severe injuries or death may occur if the cables and terminals in the inverter are touched.
Observe all safety information provided by the battery manufacturer.

⚠ WARNING

Damage to the product caused by incorrect wiring is not covered by the warranty.

- **Electrical connection must be performed by professionals.**
- **Please use measuring devices with an appropriate range. Overvoltage can damage the measuring device and cause personal injury.**
- **All cables used in the PV generation system must be firmly attached, properly insulated, and adequately dimensioned.**
- **Do not damage the ground conductor. Do not operate the product in the absence of a properly installed ground conductor. Otherwise, it may cause personal injury or product damage.**

⚠ WARNING

Check the positive and negative polarity of the PV strings, and connect the PV connectors to corresponding terminals only after ensuring polarity correctness. During the installation and operation of the inverter, please ensure that the positive or negative poles of PV strings do not short-circuit to the ground. Otherwise, an AC or DC short-circuit may occur, resulting in equipment damage. The damage caused by this is not covered by the warranty.
The interfaces of the battery in the system must be compatible with the inverter. The entire battery voltage range must be completely within the permissible range of the inverter, and the battery voltage shall not exceed the maximum permissible DC input voltage of the inverter.

NOTICE

- **Comply with the safety instructions related to PV strings and the regulations related to the local grid.**
- **Install the external protective grounding cable first when performing electrical connection and remove the external protective grounding cable last when removing the inverter.**

1.4 Operation Safety

⚠ DANGER

When routing cables, ensure a distance of at least 30 mm between the cables and heat-generating components or areas to protect the insulation layer of cables from aging and damage.
When the product is working:

- **Do not touch the product enclosure.**
- **It is strictly forbidden to plug and unplug any connector on the inverter.**
- **Do not touch any wiring terminal of the inverter. Otherwise, electric shock may occur.**
- **Do not disassemble any parts of the inverter. Otherwise, electric shock may occur.**
- **It is strictly forbidden to touch any hot parts of the inverter (such as the heat sink). Otherwise, it may cause burns.**
- **Do not connect or remove any battery. Otherwise, electric shock may occur.**
- **Do not connect or remove any PV string or any PV module in a string. Otherwise, electric shock may occur.**
- **If the inverter is equipped with a DC switch, do not operate it. Otherwise, it may cause device damage or personal injury.**

Do not take other actions, such as setting parameters or cutting off power, during the process of inverter firmware update, to avoid update failure.

1.5 Maintenance Safety

⚠ DANGER

Risk of inverter damage or personal injury due to incorrect service!

- **Before maintenance, disconnect the AC circuit breaker on the grid side and then the DC switch. If a fault that may cause personal injury or device damage is found before maintenance, disconnect the AC circuit breaker and wait until the night before operating the DC switch. Otherwise, a fire inside the product or an explosion may occur, causing personal injuries.**
- **After the inverter is powered off for 10 minutes, measure the voltage and current with professional instrument. Only when there is no voltage nor current can operators who wear protective equipment operate and maintain the inverter.**
- **Even if the inverter is shut down, it may still be hot and cause burns. Wear protective gloves before operating the inverter after it cools down.**

⚠ DANGER

Touching the power grid or the contact points and terminals on the inverter connected to the power grid may lead to electric shock!

- **The power grid side may generate voltage. Always use a standard voltmeter to ensure that there is no voltage before touching.**

⚠ CAUTION

To prevent misuse or accidents caused by unrelated personnel, post prominent warning signs or demarcate safety warning areas around the product.

NOTICE

To avoid the risk of electric shock, do not perform any other maintenance operations beyond those described in this manual. If necessary, contact your distributor first. If the problem persists, contact SUNGROW. Otherwise, the losses caused is not covered by the warranty.

NOTICE

Improper settings or maintenance can permanently damage the battery. Incorrect inverter parameters will lead to the premature aging of battery.

NOTICE

- **If the paint on the inverter enclosure falls or rusts, repair it in time. Otherwise, the inverter performance may be affected.**
- **Do not use cleaning agents to clean the inverter. Otherwise, the inverter may be damaged, and the loss caused is not covered by the warranty.**
- **As the inverter contains no parts that can be maintained, never open the enclosure of the inverter or replace any internal components without authorization. Otherwise, the loss caused is not covered by the warranty.**
- **Do not open the maintenance door in rainy or snowy weather. If it is inevitable, take proper protective measures to avoid the ingress of rainwater and snow into the maintenance compartment; otherwise, the product's operation may be affected.**
- **Before closing the maintenance door, check whether there is any object left inside the maintenance compartment, such as screws, tools, etc.**
- **It is recommended for users to use cable sheathing to protect the AC cable. If the cable sheathing is used, make sure it is positioned inside the maintenance compartment.**

1.6 Disposal Safety

⚠ WARNING

Please scrap the product in accordance with relevant local regulations and standards to avoid property losses or casualties.

2 Product Description

2.1 System Introduction

⚠ WARNING

- **The inverter must only be operated with PV strings with class II protection in accordance with IEC 61730, application class A. It is not allowed for the positive pole or the negative pole of the PV strings to be grounded. This can cause the inverter to be destroyed.**
- **Do not connect any local load between the inverter and the AC circuit breaker.**

NOTICE

For the TT utility grid, the N line voltage to ground must be 30 V or less.
The inverter applies only to the scenarios described in this manual.

The three-phase hybrid inverters are applicable to both on-grid and off-grid PV systems. With the integrated Energy Management System (EMS), they can control and optimize the energy flow so as to increase the self-consumption of the system.

2.2 Product Introduction

Model Description

The model description is as follows (take SH10RT as an example):

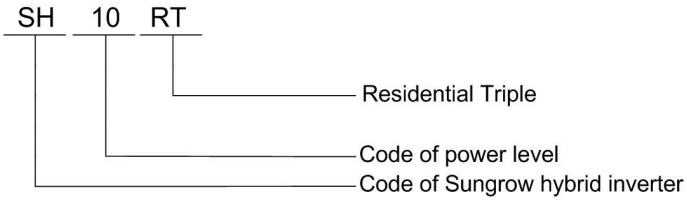

Appearance

The image shown here is for reference only. The actual product received may differ.

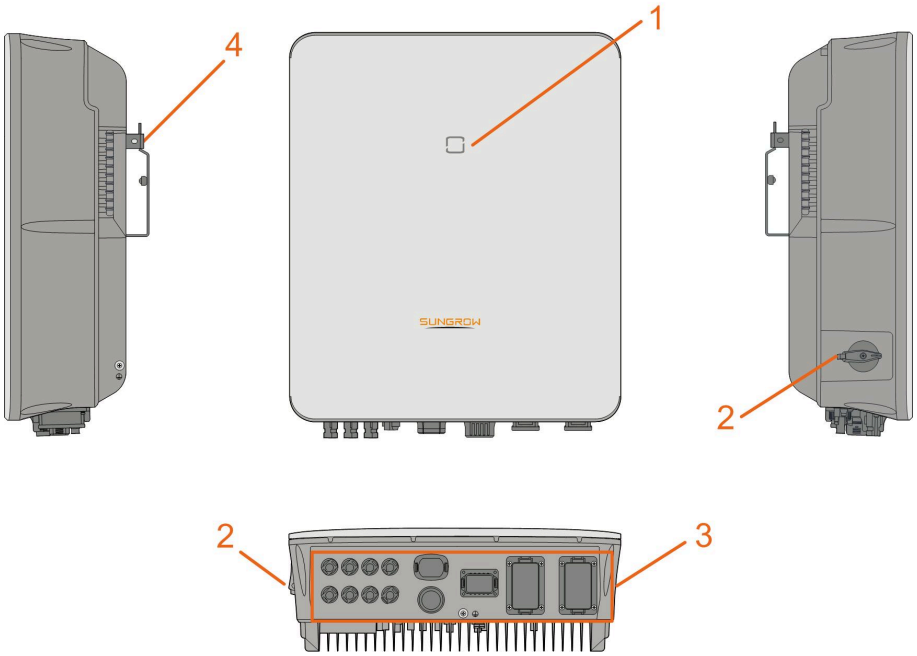

Figure 2-1 Inverter Appearance

No.	Name	Description
1	LED indicator panel	Indicates the current working state of the inverter.
2	DC switch(Optional)	Used to disconnect PV - only when there is no PV production.
3	Electrical connection area	Includes DC terminals, AC terminals, battery terminals, communication terminals and additional grounding terminal.
4	Hanger	Used to hang the inverter on the wall-mounting bracket.

Dimensions

The following figure shows the dimensions of the inverter.

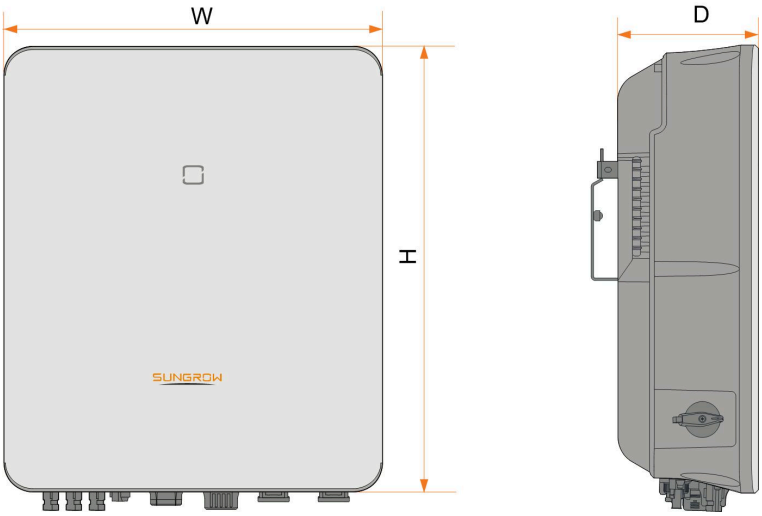

Figure 2-2 Dimensions of the Inverter

W(mm)	H(mm)	D(mm)	Weight(kg)
460	540	170	27

2.3 Symbols on the Product

Symbol	Explanation
	RCM mark of conformity.
	TÜV mark of conformity.
	CE mark of conformity. EU/EEA Importer
	Do not dispose of the inverter together with household waste.
	The inverter does not have a transformer.
	Disconnect the inverter from all the external power sources before maintenance!

Symbol	Explanation
	Read the user manual before maintenance!
	Read the user manual before maintenance!
	Burn danger due to hot surface that may exceed 60℃.
	Danger to life due to high voltages! Only qualified personnel can open and service the inverter.
	Do not touch live parts for 10 minutes after disconnection from the power sources.
	Additional grounding point.
	RoHS labeling The product complies with the requirements of the applicable EU directives.

Users may also put other warning signs as per the requirements of the local standards or installation specifications.

2.4 LED Indicator

The LED indicator on the front of the inverter indicates the working state of the inverter.

Table 2-1 LED Indicator State Description

LED Color	state	Definition
Blue	ON	The inverter is running in the on/off-grid mode.
	Blink	The inverter is at standby or startup state (without on/off-grid operation).

LED Color	state	Definition
Red	ON	A system fault has occurred.
Gray	OFF	Both the AC and DC sides are powered down.

⚠ WARNING

Voltage may still be present in AC side circuits after the indicator is off. Pay attention to the electricity safety when operating.

2.5 DC Switch

The DC Switch is used to disconnect or connect the PV-DC circuit when AC is turned off or DC current is below 0.5 A.

The inverter operates automatically when input and output requirements are met. Rotate the DC switch to the “OFF” position to stop the inverter when a fault occurs. When you need to stop the inverter normally please first turn off AC and shut down the hybrid via App.

Turn the DC switch to the “ON” position before restarting the inverter.

2.6 PV Energy Storage System (PV ESS)

NOTICE

When designing the system, ensure that the operating ranges of all devices that are connected to the inverter meet the requirements of the inverter.

2.6.1 PV ESS Introduction

By directly connecting a battery module to the inverter, the conventional PV system can be upgraded to be an Energy Storage System (ESS).

The system is capable of operating off-grid to ensure an emergency power supply for protected loads in the event of a grid interruption or blackout, which may be caused by:

- islanding;
- under-voltage;
- under-frequency or over-frequency.

NOTICE

- **Under any connection, either grid-connection or off-grid application, please be sure that the potential voltage between N and PE line is not higher than 30V, otherwise, inverter will stop generating power.**
- **The system is not suitable for supplying life-sustaining medical devices. It cannot guarantee backup power in all circumstances.**

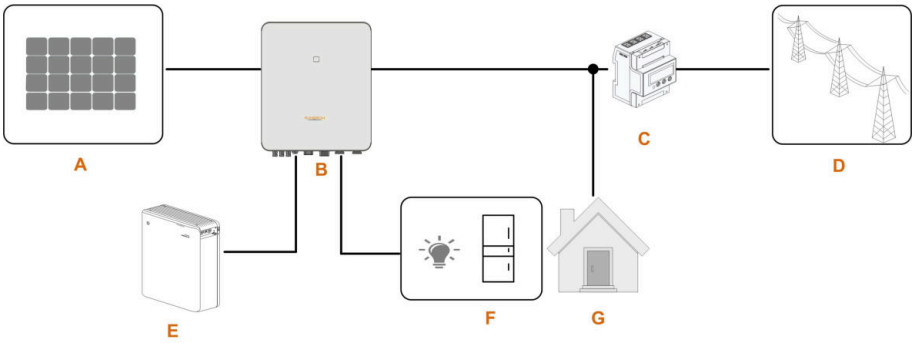

Figure 2-3 PV Energy Storage System (PV ESS)

Table 2-2 System Compositions

Item	Description	Remark
A	PV strings	Compatible with monocrystalline silicon, polycrystalline silicon, and thin-film without grounding.
B	Inverter	SH5.0–10RT/SH5.0–10RT-20
C	Three-phase Smart Energy Meter	Measures the export power and communicates with the inverter via the RS485 port.
D	Utility grid	Grid grounding system types: TT, TN, TN-C-S, TN-S, TN-C, the type of grid grounding system depends on local regulations.
E	Battery (optional)	A Li ion battery from the compatibility list.
F	Backup loads	Protected house loads directly connected to the inverter.
G	Normal Loads	Non protected house loads, they will disconnect in case of grid failure.

The SHRT series does not support phase-wise zero-power export. It cannot comply with local grid requirements that prohibit power injection on any individual phase.

2.6.2 Declaration For Backup Function

⚠ DANGER

This product is not suitable for supplying power to life-sustaining medical devices since power outages may result in danger to life.

The following statement involves SUNGROW general policies about the hybrid inverters described in this document.

1. For hybrid inverters, the electrical installation typically includes connection of the inverter to both PV modules and batteries. If there is no available power from batteries or PV modules in backup mode, the backup power supply will be automatically terminated. SUNGROW shall hold no liability for any consequences arising from failing to observe this instruction.
2. Normally, the backup switching time is less than 20 ms . However, some external factors or local regulations may cause the system to fail on backup mode. Therefore, the users must be aware of conditions and follow the instructions as below:

- Do not connect loads that are dependent on a stable energy supply for a reliable operation.
- Do not connect the loads whose total capacity is greater than the maximum backup capacity.
- Do not connect the loads that may cause very high start-up current surges, such as non-frequency conversion air conditioning, vacuum cleaner or half-wave loads such as hair dryer, heat gun, hammer drill. Refer to 11.2 The Compatibility for Backup under Off-grid Scenario for recommended loads.
- Due to the condition of the battery itself, battery current might be limited by some factors, including but not limited to the temperature and weather.

Declaration For Backup Overload Protection

The inverter will restart in case of Overload Protection. The time required for restarting will increase (5 min at most) if Overload Protection repeats. Try to reduce backup load power within maximum limitation or remove the loads which may cause very high start-up current surges.

2.6.3 Energy Management

The battery discharges to provide energy to loads. If the battery is empty or there is not enough power from the battery system, the grid shall supply power to backup loads and normal loads.

When the grid is present, the bypass function of the hybrid inverter is activated and the Backup loads will be directly connected to the grid via the bypass switch integrated in the inverter.

If the Smart Energy Meter is abnormal or not equipped, the inverter will run normally, however, the battery can be charged but not allowed to discharge. In this case the feed-in power setting will be ineffective, and the DO function for optimized mode will be disabled.

Energy Management during Daytime

The energy management system (EMS) works in self-consumption mode by default.

- Scenario 1: PV power generation ≥ Load power consumption
  - First,PV power will go to Backup loads first, then normal loads and the battery.
  - Moreover,If the battery is fully charged, the excess will go to the grid. The feed-in power will not surpass the feed-in limitation value in initial settings.
- Scenario 2: PV power generation < Load power consumption
  - First,battery will discharge and provide the energy missing.
  - Moreover,inverter will draw power from the mains if the power from the PV and battery is less than the load power.

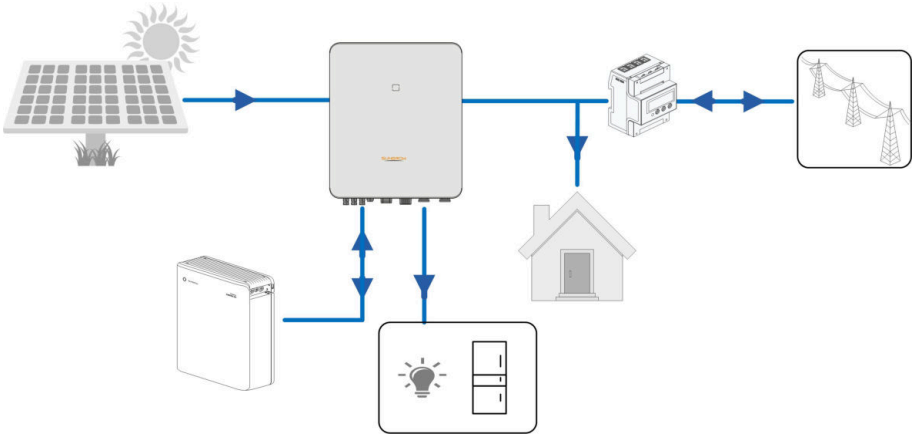

With current No current

Energy Management during Night

During night, with energy available, the battery will discharge to supply power for loads. Alternatively, the grid will supply power for the loads in case the discharge power of the battery is insufficient.

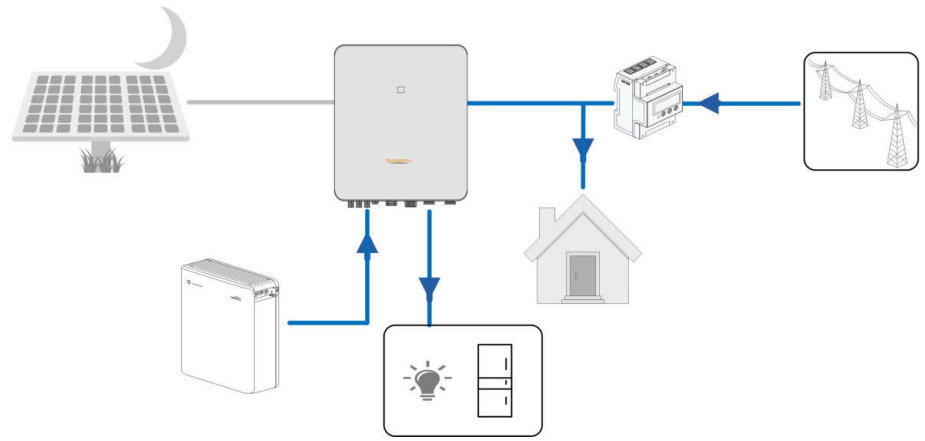

With current No current

During night, when the battery is empty, it will enter into standby mode. In this case, the grid will supply all power for loads.

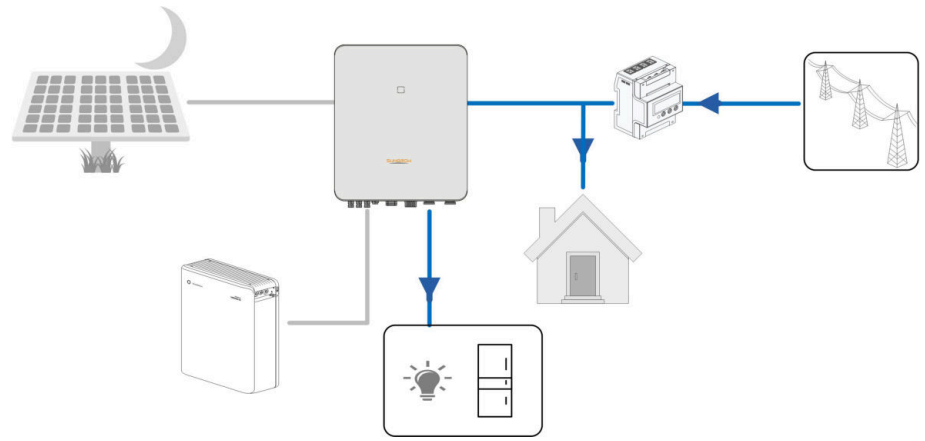

With current No current

2.7 Parallel System

2.7.1 Grid-connected Parallel System

Maximum two hybrid inverters with the same type can be connected in parallel in the PV ESS via RS485 communication. Each hybrid inverter will independently provide power to loads attached at the backup-port in case of a grid outage.

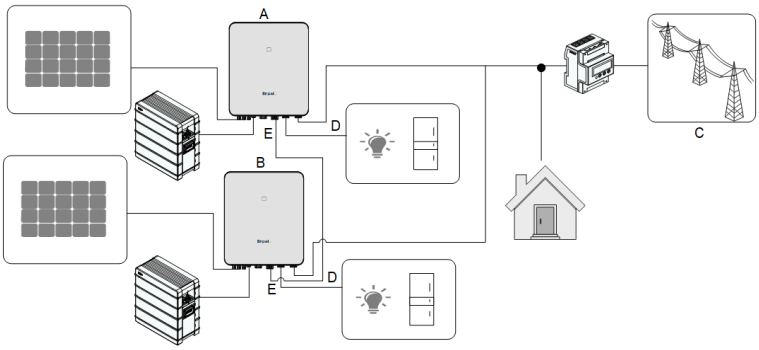

Figure 2-4 Parallel PV ESS

(A) Master	(B) Slave 1	(C) GRID
(D) BACK-UP	(E) RS485	

> Only the hybrid GRID terminals can be connected in parallel, the BACK-UP terminals and the battery terminals cannot be connected together. Each hybrid must have its own BACK-UP loads. The Backup loads of each inverter should not exceed its nominal power.

Refer to 6.7.3 RS485 Connection for the cable connection.

In an on-grid parallel system, the master inverter collects information from Smart Energy Meter and slave inverter and performs the energy management including:

- Feed-in power control.
- Battery charge / discharge
- Maximum power limitation

The following settings are required for the inverter parallel function.

- Feed-in power control. The PV installation power of the master inverter is the total installation power of the system, the slave inverters do not need to set the feed-in power.
- Ripple Control. The Ripple Control device only needs to be connected to the master inverter, which will perform unified scheduling. Refer to 6.12 DI Connection for the cable connection.
- Parallel Configuration.

2.8 PV Storage and EV-Charging System

A PV storage and charging system with chargers is as follows:

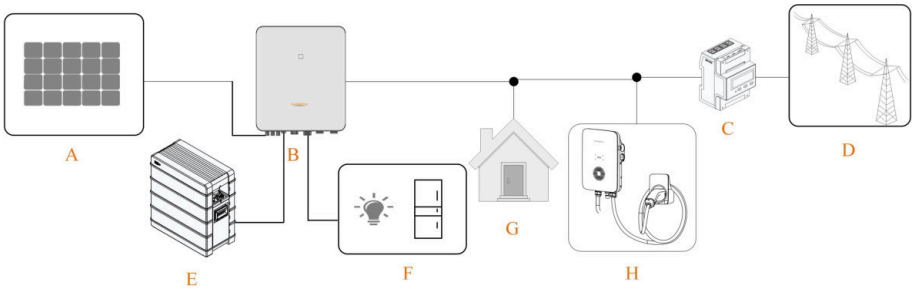

Figure 2-5 PV Storage and EV-Charger System

Table 2-3 System Compositions

Item	Description	Remark
A	PV strings	Compatible with monocrystalline silicon, polycrystalline silicon, and thin-film without grounding.
B	Inverter	SH5.0RT-20/SH6.0RT-20/SH8.0RT-20/ SH10RT-20
C	Three-phase Smart Energy Meter	Measures the export power and communicates with the inverter via the RS485 port.
D	Utility grid	Grid grounding system types: TT, TN, TN-C-S, TN-S, TN-C, the type of grid grounding system depends on local regulations.
E	Battery (optional)	A Li ion battery from the compatibility list.
F	Backup loads	Protected house loads directly connected to the inverter.
G	Normal Loads	Non protected house loads, they will disconnect in case of grid failure.
H	EV-Charger(Optional)*	AC011E-01/AC22E01

When used with a charging pile, in ECO mode, single-phase charging may result in the other two phases feeding back into the grid.

2.9 Retrofitting the Existing PV System

The hybrid inverter is compatible with any three-phase PV grid-connected inverters. An existing PV system can be retrofitted to be a PV ESS with the addition of the hybrid inverter.

The power generation from the existing PV inverter will be firstly provided to the loads and then charge the battery. With the energy management function of the hybrid inverter, the self-consumption of the new system will be greatly improved.

On-grid Port to Retrofit the Existing PV System

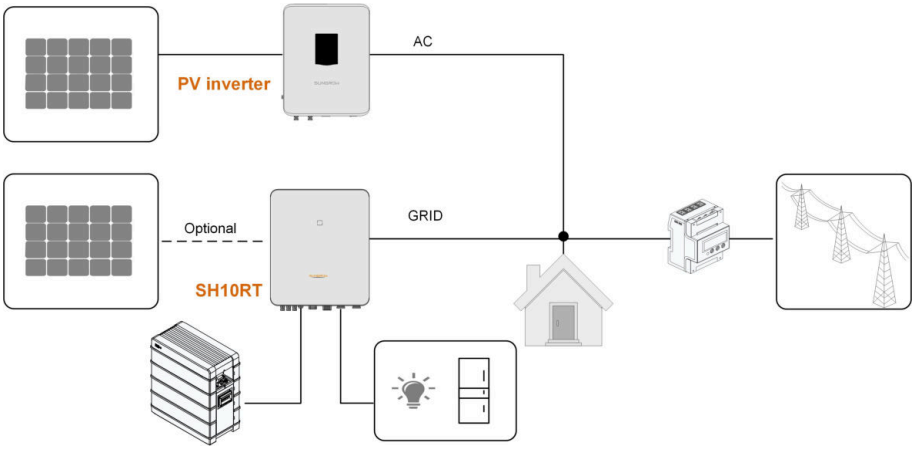

Figure 2-6 On-grid Port to Retrofit the Existing PV System

The AC terminal of the PV inverter and the GRID terminal of the hybrid inverter are connected in parallel.

Backup terminal to Retrofit the Existing PV System

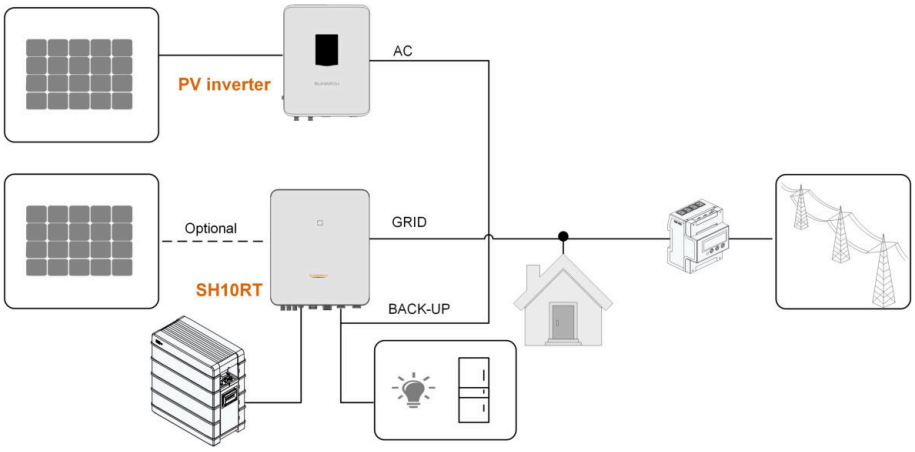

Figure 2-7 Backup terminal to Retrofit the Existing PV System

The backup terminal retrofits the existing PV system in order to maximize the use of PV energy by allowing the PV inverter to work even when off-grid.

The AC terminal of the PV inverter and the BACK-UP terminal of the hybrid inverter are connected in parallel. This option is not available in the European region.

The PV inverter power cannot exceed the nominal power of the hybrid inverter (if it is a single-phase PV inverter, the PV inverter power cannot exceed the single-phase nominal power of the three-phase hybrid inverter).

Before retrofitting the existing PV system to an backup terminal, the "Frequency Shift Power Control" parameter needs to be enabled.

Note:

1. In zero-export scenario, the hybrid inverter can only ensure no power exported to grid itself but does not ensure zero export for the PV inverter. Please contact the PV inverter manufacturer for its zero-export solution.
2. PV modules for hybrid inverter are optional.
3. If the system adopts third-party inverters, the electric meter requires 2 CTs for monitoing, with CT1 connected to the grid port and CT2 connected to the AC port of the thrid-party inverters. If SUNGROW inverters are adopted, only 1 CT is required, and the CT shall be connected to the grid port.

2.10 Retrofitted PV Storage and EV-Charging System

The retrofitted PV storage and charging system is as follows:

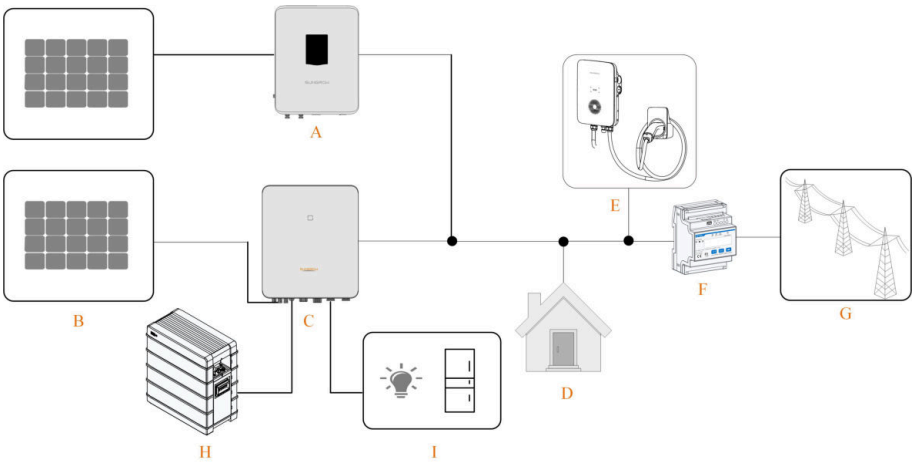

Figure 2-8 Retrofitted PV Storage and EV-Charger System

(A) PV Inverter	(B) PV Strings	(C) SH5.0RT-20/ SH6.0RT-20/SH8.0RT-20/ SH10RT-20
(D) Home Loads	(E) EV Charger	(F) Smart Energy Meter
(G) Utility Grid	(H) Battery	(I) Backup Loads

If the EV-Charger is connected to one Hybrid inverter, it is not possible to use multiple hybrid inverters in parallel.

3 Function Description

3.1 Safety Function

3.1.1 Protection

Several protective functions are integrated in the inverter, including short circuit protection, grounding insulation resistance surveillance, residual current protection, anti-islanding protection, DC overvoltage / over-current protection, etc.

3.1.2 Earth Fault Alarm

The inverter has integrated a multiple-function dry-contact (DO relay), which can be used for the external alarm for earth fault. The external alarm needs to be powered by the grid.

The additional equipment required is a light indicator and/or a buzzer.

If an earth fault occurs:

- the DO dry-contact will switch on automatically to signal the earth fault alarm;
- the buzzer inside the inverter will also beep;
- the Ethernet communication port can be used for transmitting the alarm remotely.

3.2 Energy Conversion and Management

The inverter converts the DC power from the PV array or the battery to the AC power, in conformity with the grid requirements. It also transmits the DC power from the PV panel to the battery.

With the bidirectional converter integrated inside, the inverter can charge or discharge the battery.

Multiple string MPP trackers are used to maximize the power from PV strings with different orientations, tilts, or module structures.

3.2.1 Power Derating

Power derating is a way to protect the inverter from overload or potential faults. In addition, the derating function can also be activated following the requirements of the utility grid.

Situations requiring inverter power derating are:

- over-temperature (including ambient temperature and module temperature)
- high input voltage
- grid under-voltage

- grid over-frequency
- power factor (when values out of the rated values)
- high altitude

3.2.2 DRM (“AU”/“NZ”)

The inverter provides a terminal block for connecting to a demand response enabling device (DRED). The DRED asserts demand response modes (DRMs). The inverter detects and initiates a response to all supported demand response commands within 2s.

The following table lists the DRMs supported by the inverter.

Table 3-1 Demand Response Modes (DRMs)

Mode	Explanation
DRM0	The inverter is in the state of “Turn off”.
DRM1	The import power from the grid is 0.
DRM2	The import power from the grid is no more than 50 % of the rated power.
DRM3	The import power from the grid is no more than 75 % of the rated power.
DRM4	The import power from the grid is 100 % of the rated power, but subject to the constraints from other active DRMs.
DRM5	The feed-in power to the grid is 0.
DRM6	The feed-in power to the grid is no more than 50 % of the rated power.
DRM7	The feed-in power to the grid is no more than 75 % of the rated power.
DRM8	The feed-in power to the grid is 100 % of the rated power, but subject to the constraints from other active DRMs.

The DRED may assert more than one DRM at a time. The following shows the priority order in response to multiple DRMs.

Multiple Modes	Priority Order
DRM1…DRM4	DRM1 > DRM2 > DRM3 > DRM4
DRM5…DRM8	DRM5 > DRM6 > DRM7 > DRM8

3.2.3 Regular Operational Voltage Range

The inverters can operate within the allowable voltage range for at least the specified observation time. The setting of the conditions depends on whether the connection is due to a normal operational start-up or an automatic reconnection after disconnection from grid.

When the voltage level is out of the operational and protection levels, the inverter will disconnect within the specified time from the grid. If a disturbance lasts longer than the required protection time, the inverter can reconnect to the grid once the voltage level goes back to normal levels after the disturbance.

3.2.4 Regular Operational Frequency Range

The inverter can operate within its frequency range for at least the specified observation time. The setting of conditions depends on whether the connection is due to a normal operational start-up or an automatic reconnection after disconnection from grid.

When the frequency level is outside the operational and protection levels, the inverter will disconnect from the grid. If a disturbance lasts longer than the required protection time, the inverter can reconnect to the grid once the frequency level goes back to normal levels after the disturbance.

3.2.5 Reactive Power Regulation

The inverter is capable of operating in reactive power regulation modes for the purpose of providing support to the grid. The reactive power regulation mode can be set via the iSolarCloud App.

3.2.6 Load Control

The inverter has an integrated multiple-function dry-contact (DO relay), which can be used for load control via a contactor.

User may set the control mode according to individual demand.

Tap **More > Settings > Energy Management Parameters > Load Control** to enter the corresponding screen, on which you can set **Load Control Mode**. Load Control Mode includes **Timing Mode**, **Switch Mode**, and **Intelligent Mode**.

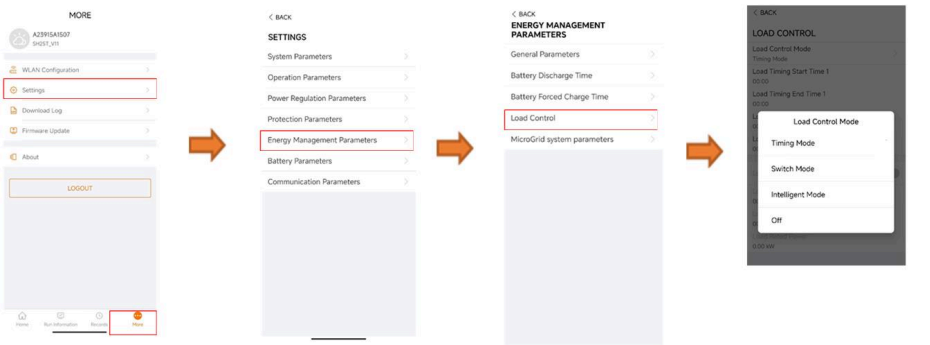

Figure 3-1 Load Control

Timing Mode

In this mode, set the **Load Timing Start Time 1** and **Load Timing End Time 1**, the system will control the load operation during the interval. Take 09:00 am–09:30 am as an example.

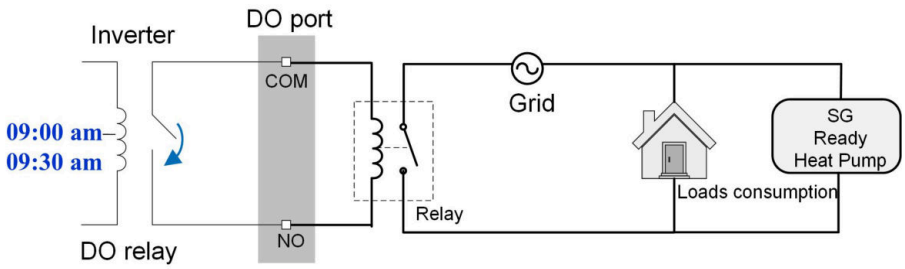

Figure 3-2 DO Operation in Timing Mode Diagram

Switch Mode

In this mode, the system will control the load operation according to the setting. In the following example, the switch is set to OFF.

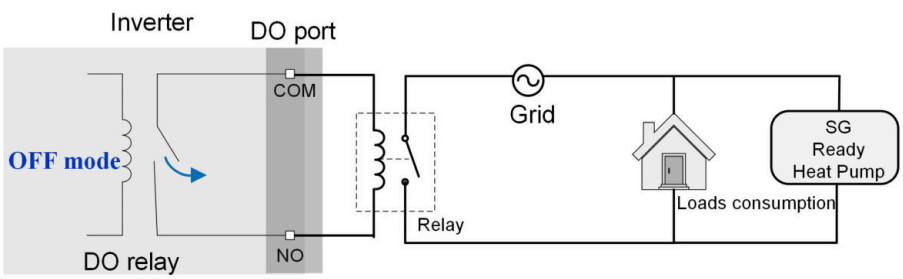

Figure 3-3 DO Operation in Switch Mode Diagram

Intelligent Mode

The system will control the load operation according to the power optimization algorithm of energy management.

During the setting interval, the DO function will be enabled to power on the load if the excess PV energy exceeds the optimized power value.

Notice:

The intelligent mode is disabled in an off-grid system.

- When the inverter is installed to retrofit an exisiting PV system, the upper limit of optimized power is the sum of the rated power of the hybrid inverter and the rated power of the existing PV inverter.
- Once the intelligent mode is enabled, the DO relay will remain connected for 20 minutes after the DO connection.

Take 09:00 am–09:30 am and the optimized power of 1000 W as an example.

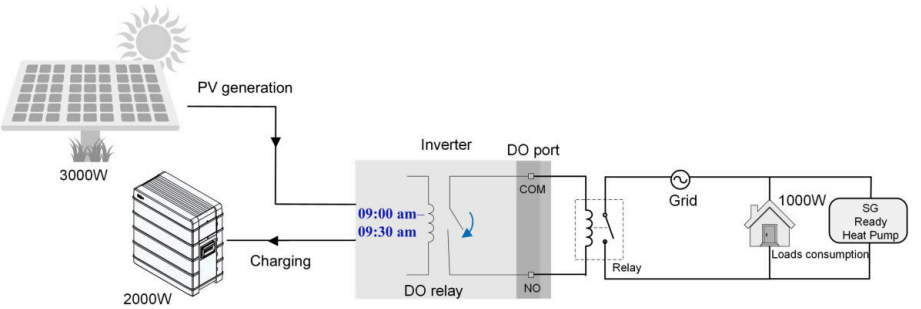

Figure 3-4 DO Operation in Intelligent Mode Diagram

- **Timing Mode:** Set the starting time and end time. The DO function will be enabled during the time interval.
- **Switch Mode:** The DO function can be enabled or disabled.
- **Intelligent Mode:** Set the starting time, end time, and the optimized power. During the interval, when the export power reaches to the optimized power, the DO function will be enabled for at least 20 minutes even if the power goes lower. The switch-on can take some time.

3.3 Battery Management

Li-ion battery from SUNGROW are compatible with the PV ESS,further battery models will be made compatible in the future.

The currently supported battery brands and models are shown in the following table.

Brand	Model	Firmware Version
SUNG ROW	SBR064	Battery: SBRBCU-S_22011.01.18 and later Inverter: SAPPHIRE-H_B001.V000.P007-20240223 and later
	SBR096/128/160/192/224/256	Battery: SBRBCU-S_22011.01.16 and later Inverter: SAPPHIRE-H_B000.V000.P005 and later
	SBH150/200/250/300/350	Battery: SBHBCU-S_22011.04.02 and later Inverter: SAPPHIRE-H_B001.V000.P007-20240223 and later

The table is continually updated. If the battery model is not in the table, consult SUNGROW if it is supported.

To maximize the battery life, the inverter will perform battery charge, discharge, and battery maintenance based on the battery status communicated by the BMS.

NOTICE

The recommended parameters listed in this section may be updated or revised due to product development. Please refer to the manual supplied by the battery manufacturer for the latest information.

State Definition

In order to avoid overcharging or deep discharging of the battery, three battery statuses according to different voltage ranges has been defined, as shown in the following table.

Table 3-2 Battery Status Definition

Type	Port Voltage / SOC		
	Empty	**Normal**	**Full**
SUNGROW (SBR064/096/128 /160/192/224/256) (SBH150/200/250 /300/350)	SOC < 5 %	5 %...100 % (by default)	SOC = 100 %

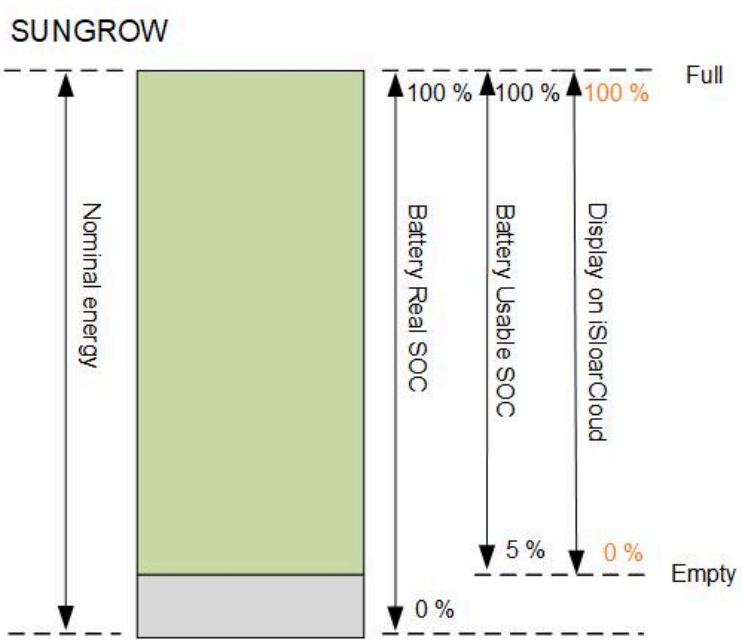

The SOC limits of Li-ion batteries can be modified via the iSolarCloud App by qualified personnel.

NOTICE

If the battery has not been used or fully charged for a long time, it is recommended to charge the battery manually every 15 days to at least 15% to ensure battery life and performance.

3.3.1 Charge Management

Backup Charge Management

The emergency charge management function is to protect the battery from the damage caused by long time excessive discharge. The inverter cannot respond to discharge command during emergency charge. The following tables describe the emergency charge conditions for different types of batteries.

Table 3-3 Backup Charge Management for Li-ion Battery

Status	Conditions
Trigger	Either of the following conditions is met: • SOC ≤ (Min. SOC) – 3% (valid only when the Min. SOC is ≥ 3 %). • A battery under-voltage warning is triggered. • An emergency charge command is reported to the inverter.
Finish	All the following conditions are met: • SOC ≥ (Min. SOC) – 1% (valid only when the Min. SOC is ≥ 3 %). • The battery under-voltage warning is cleared. • The emergency charge command reported to the inverter is cleared.

Table 3-4 Default SOC Conditions for Li-ion Battery Backup Charge

Type	Trigger SOC	Finishing SOC
SUNGROW	SOC ≤ 2 %	SOC ≥ 4 %

Normal Charge Management

When the battery voltage is within the normal range, the inverter can charge the battery if the PV power is higher than the load power and can ensure that the battery is never over-charged.

The maximum allowable charge current is limited to the smaller value among the following:

- the maximum charge current of the inverter (30A);
- the maximum / recommended charge current from the battery manufacturer.

For this reason, the battery charge power may not reach the nominal power.

- If the PV voltage is higher than 900 V, the battery cannot charge.
- The hybrid inverter will start to charge the battery when the export power value exceeds a pre-defined threshold value of 70 W.

3.3.2 Discharge Management

Discharge management can effectively protect the battery from deep discharging.

The maximum allowable discharge current is limited to the smaller value among the following:

- the maximum discharge current of the inverter (30A).
- the maximum / recommended discharge current from the battery manufacturer.

For this reason, the battery discharge power may not reach the nominal power.

- If the PV voltage is higher than 900 V, the battery cannot discharge.
- After the user enables the Battery first function, PV power may not be fully utilized.
- The battery will not discharge when the load power is below 150W.

3.4 Communication and Configuration

The inverter possesses various ports for device and system monitoring, including RS485, Ethernet, WLAN, and CAN; various parameters can be configured for optimal operation. The inverter information is accessible through the iSolarCloud App.

3.5 EV Charger Management

The currently supported EV Charger brands and models are shown in the following table.

Brand	Model	Firmware Version
SUNG ROW	• AC011E-01 • AC22E01	• ≥V1.2.469 • ≥LE-01.1E1.001.101.32

4 Unpacking and Storage

4.1 Unpacking and Inspection

The product is thoroughly tested and strictly inspected before delivery. Nonetheless, damage may still occur during shipping. For this reason, please conduct a thorough inspection after receiving the product.

- Check the packing case for any visible damage.
- Check the scope of delivery for completeness according to the packing list.
- Check the inner contents for damage after unpacking.

Contact SUNGROW or the transport company in case of any damage or incompleteness, and provide photos to facilitate services.

Do not dispose of the original packing case. It is recommended to store the device in the original packing case when the product is decommissioned.

NOTICE

- **After receiving the product, check whether the appearance and structural parts of the device are damaged, and check whether the packing list is consistent with the actual ordered product. If there are problems with the above inspection items, do not install the device and contact your distributor first. If the problem persists, contact SUNGROW in time.**
- **If any tool is used for unpacking, be careful not to damage the product.**

4.2 Scope of Delivery

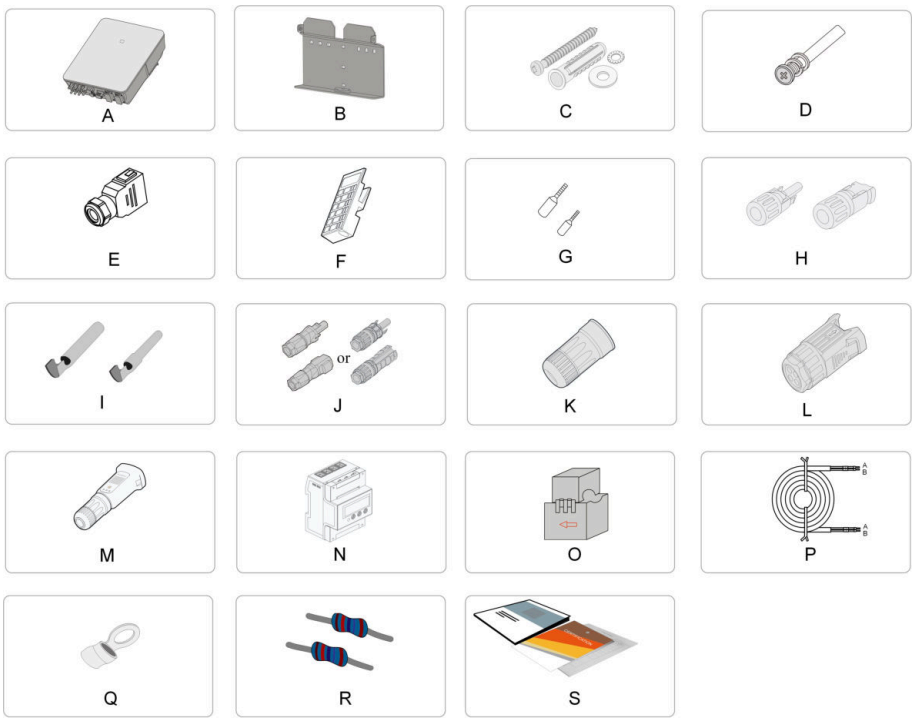

Figure 4-1 Scope of delivery

Item	Name	Quantity
A	Inverter	1
B	Wall-mounting bracket *	1
C	Expansion plug set	4
D	M4 screws and washers	2
E	AC/Backup connector set	2
F	Block (Optional)	1
G	Cord end terminal *	-
H	PV connector	2–3
I	Crimp contact	2–3
J	Battery contact	1
K	LAN connector set	1
L	COM connector set	1

Item	Name	Quantity
M	WiNet-S module	1
N	Smart Energy Meter**	1
O	Current Transformer(CT)***	3/6
P	OT terminal *	1
R	120Ω Resistor	1
S	Documents	1

* The images shown here are for reference. The actual product and quantity are based on delivery.

** SH5.0–10RT matches DTSU666 smart energy meters, and SH5.0–10RT-20 matches DTSU666-20 smart energy meters.

*** This accessory is only for SH5.0-10RT-20.The Australia and New Zealand region is equipped with 6 x 100A/0.333V CT as standard, and the other areas are equipped with 3 x 100A/0.333V CT as standard.

4.3 Inverter Storage

Proper storage is required if the inverter is not installed immediately.

- Store the inverter in the original packing case with the desiccant inside.
- The storage temperature must be always between -30℃ and +70℃, and the storage relative humidity must be always between 0 and 95 %, non-condensing.
- In case of stacking storage, the number of stacking layers should never exceed the limit marked on the outer side of the packing case.
- The packing case should be upright.
- If the inverter needs to be transported again, pack it strictly before loading and transporting it.
- Do not store the inverter in places susceptible to direct sunlight, rain, and strong electric field.
- Do not place the inverter in places with items that may affect or damage the inverter.
- Store the inverter in a clean and dry place to prevent dust and water vapor from eroding.
- Do not store the inverter in places with corrosive substances or susceptible to rodents and insects.
- Carry out periodic inspections. Inspection shall be conducted at least once every six months. If any insect or rodent bites are found, replace the packaging materials in time.

- If the inverter has been stored for one year or longer, or has been mounted but remains non-operational for more than three months, it must be inspected and tested by qualified personnel before being put into operation.

NOTICE

Please store the inverter according to the storage requirements. Product damage caused by failure to meet the storage requirements is not covered by the warranty.

5 Mechanical Mounting

⚠ WARNING

Respect all local standards and requirements during mechanical installation.

5.1 Safety During Mounting

⚠ DANGER

Make sure there is no electrical connection before installation.
Before drilling, avoid the water and electricity wiring in the wall.

⚠ WARNING

For specific requirements for the installation environment, see 5.2.1 Installation Environment Requirements. In case the environment where the product is installed does not meet the requirements, SUNGROW shall not be held liable for any property damage arising therefrom.

⚠ CAUTION

Improper handling may cause personal injury!

- **When moving the product, be aware of its weight and keep the balance to prevent it from tilting or falling.**
- **Wear proper protective equipment before performing operations on the product.**
- **The bottom terminals and interfaces of the product cannot directly contact the ground or other supports. The product cannot be directly placed on the ground.**

NOTICE

During installation, ensure that no device in the system causes it hard for the DC switch and the AC circuit breaker to act or hinders maintenance personnel from operating.
If drilling is required during installation:

- **Wear goggles and protective gloves when drilling holes.**
- **Make sure to avoid the water and electricity wiring in the wall before drilling.**
- **Protect the product from shavings and dust.**

5.2 Location Requirements

To a large extent, a proper installation location ensures safe operation, service life, and performance of the inverter.

- The inverter with protection rating IP65 can be installed both indoors and outdoors.
- The inverter should be installed at a height that allows easy viewing of the LED indicator panel, as well as easy electrical connection, operation and maintenance.

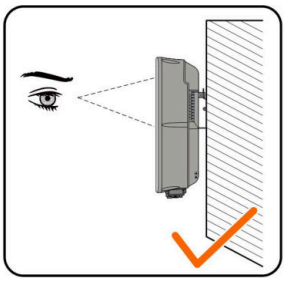

5.2.1 Installation Environment Requirements

- If the inverter is installed in a place with lush vegetation, weed on a regular basis. In addition, the ground beneath the inverter needs to undergo certain treatment, such as laying cement or gravel, etc. (an area of 3 m × 2.5 m is recommended).
- Do not install the inverter in an environment with flammables, explosives, or smoke.
- Do not install the inverter in places prone to water leak, e.g., under the air-conditioner vent, the air vent, or the cable outlet window of the machine room, so as to prevent device damage or short circuit caused by intrusion of water.
- Do not install the inverter in a place with corrosives such as corrosive gas and organic solvent, etc.
- When the inverter is running, its surface may carry high voltages or get very hot. Do not touch it; otherwise, it may lead to burns or electric shocks.
- Do not install the inverter in a place that can be easily reached.
- The installation site must have solid ground, free of rubber-like soils (which cannot be effectively compacted) or weak soils, and should not be prone to subsidence. Also, avoid low-lying areas where water or snow may accumulate. Ensure the site is located above the highest recorded water level in the area.
- Do not install the inverter in a position that could be flooded.
- To prevent vegetation or water on the ground from impacting inverter operation, if the space above meets the designated requirements, elevate the inverter to an appropriate height.
- Install the inverter in a place with shelter, so as to prevent it from getting impacted by direct sunlight and severe weather (e.g., snow, rain, and lightning). The inverter will derate in high temperatures for self-protection. If installed in a place directly exposed to sunlight, as the temperature rises, the inverter may experience power reduction.
- Good heat dissipation is very important to the inverter. Please install the inverter in a ventilated environment.

- Please consult SUNGROW before installing inverters outdoors in areas prone to salt damage, which are mainly coastal areas within 500 meters of the coast. The sedimentation amount of salt spray is correlated to the characteristics of the seawater, sea winds, precipitation, air humidity, topography, and forest coverage in the adjacent sea areas, and there are substantial differences between different coastal areas.
- To ensure device safety and service life, avoid using this product in highly polluted environments containing substances such as sulfur or halogens.
- The inverter is strictly prohibited from being installed in environments with vibration or strong electromagnetic fields (including strong common-mode interference). A strong magnetic field environment refers to one where the magnetic field strength exceeds 30 A/m. The aforementioned environments may cause the product to malfunction.
- In dusty environments such as places full of dust, smoke, or floc, particles may cling to the device's air outlet or heat sink, thus impacting its heat dissipation performance or even getting it damaged. Therefore, do not install the inverter in dusty environments. If the inverter has to be installed in such environments, please clean its fans and heat sink on a regular basis to ensure a good heat dissipation performance.
- The average temperature approximately 1 m around the inverter should be taken as its ambient operating temperature. The temperature and humidity should meet the requirements below:

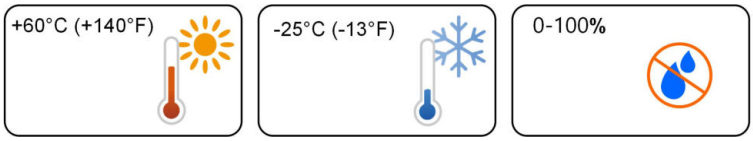

5.2.2 Carrier Requirements

The mounting structure where the inverter is installed must comply with local/national standards and guidelines. Ensure that the installation surface is solid enough to bear four times the weight of the inverter and is suitable for the dimensions of the inverter (e.g. cement walls, plasterboard walls, etc.).

Do not install the inverter on a carrier that may vibrate in resonance, so as to avoid making bigger noise.

Installation on combustible building materials is strictly prohibited. Suitable mounting surfaces include:

Non-combustible wall surfaces: Concrete, fire-resistant gypsum board, brick wall, etc. Non-combustible roof structures: Color-Coated corrugated steel roofing sheets, precast concrete slabs, fiber-reinforced cement boards, etc.

S900-I003

5.2.3 Angle Requirements

Install the inverter vertically. Never install the inverter horizontally, or at forward/backward tilted, or upside down.

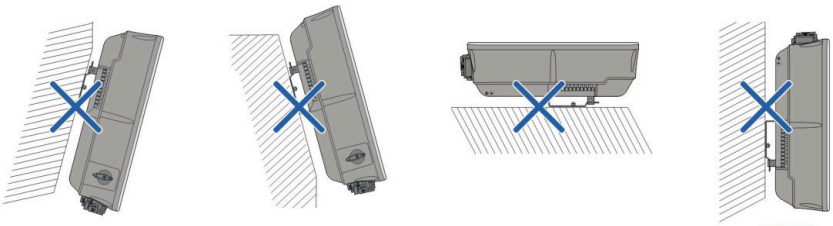

S900-I004

5.2.4 Clearance Requirements

Reserve enough clearance around the inverter to ensure sufficient space for heat dissipation.

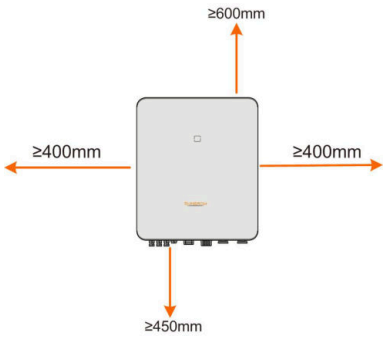

In case of multiple inverters, reserve specific clearance between the inverters.

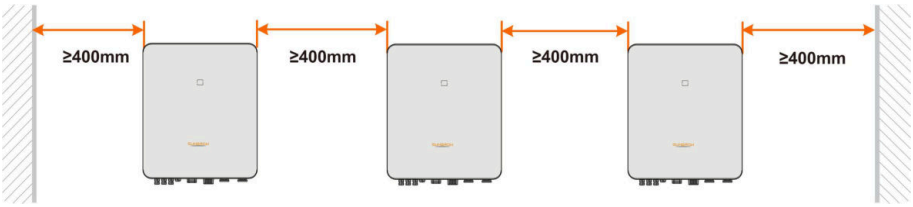

Install the inverter at an appropriate height for ease of viewing LED indicator and operating switch(es).

5.3 Installation Tools

Installation tools include but are not limited to the following recommended ones. If necessary, use other auxiliary tools on site.

Goggles

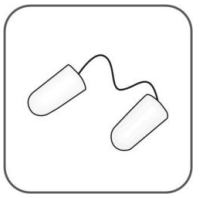

Earplugs

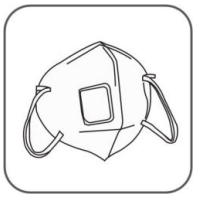

Dust mask

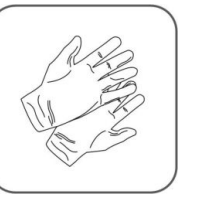

Safety gloves

Safety shoes

Utility knife

Slotted screwdriver (M4)

Phillips screwdriver (M4)

Hammer drill (φ10)

Marker

Vacuum cleaner

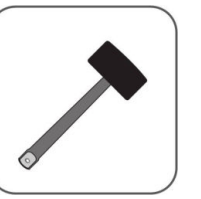

Rubber mallet

Anti-static wrist strap

Wire cutter

Wire stripper

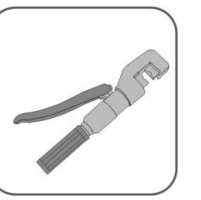

Hydraulic pliers

Heat gun

MC4 terminal crimping tool 4–6mm^2

Connector wrench

Multimeter ≥ 1000V DC

Open-end wrench (16 mm, 46 mm)

RJ45 crimping tool

5.4 Moving the Inverter

Before installation, remove the inverter from the packing case and move it to the installation site. Follow the instructions below as you move the inverter:

- Always be aware of the weight of the inverter.
- Lift the inverter using the handles positioned on both sides of the inverter.
- Move the inverter by one or two people or by using a proper transport tool.
- Do not release the equipment unless it has been firmly secured.

⚠ CAUTION

Improper handling may cause personal injury!

- **Arrange an appropriate number of personnel to carry the inverter according to its weight, and installation personnel should wear protective equipment such as anti-impact shoes and gloves.**
- **Attention must be paid to the center of gravity of the inverter to avoid tilting during handling.**
- **Placing the inverter directly on a hard ground may cause damage to its metal enclosure. Protective materials such as sponge pad or foam cushion should be placed underneath the inverter.**
- **Move the inverter by holding the handles on it. Do not move the inverter by holding the terminals.**

5.5 Installing the Inverter

Prerequisite

Install the inverter on the wall using the provided wall-mounting bracket and expansion plug sets.

The expansion plug set shown below is recommended for the installation.

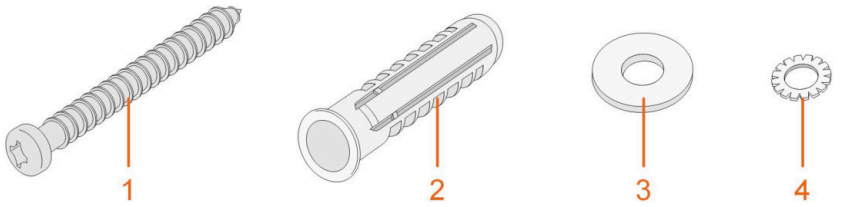

(1) Self-tapping screw (2) Expansion tube (3) Fender washer (4) Spring washer

Step 1 Install the wall-mounting bracket.

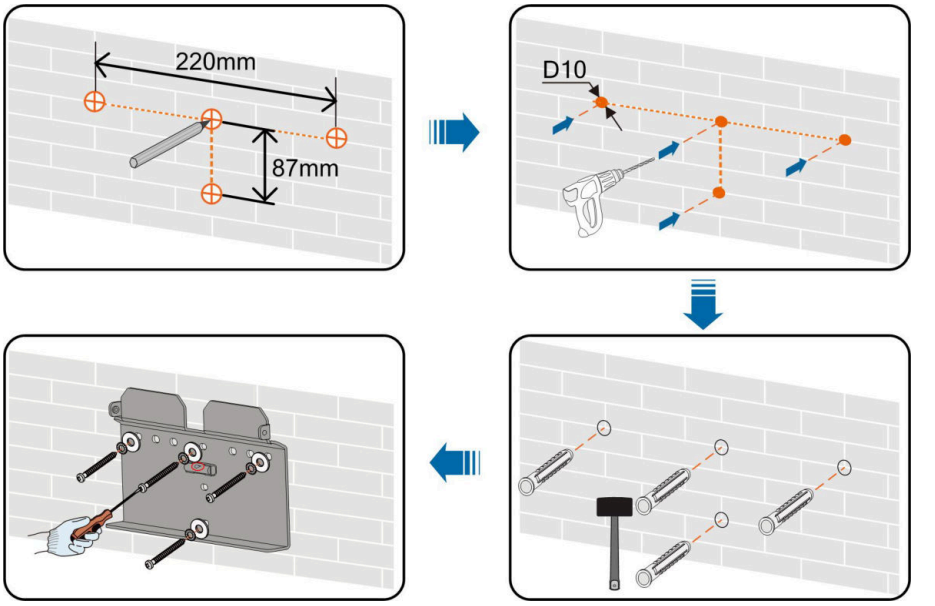

Note:

a. The depth of the holes should be about 70 mm.

b. The bubble in the bubble level on the mounting-bracket must be centered to ensure that the device will be placed horizontally.

Step 2 Mount the inverter to the bracket. Secure the inverter with two M4 screws and washers. (1.5 N•m)

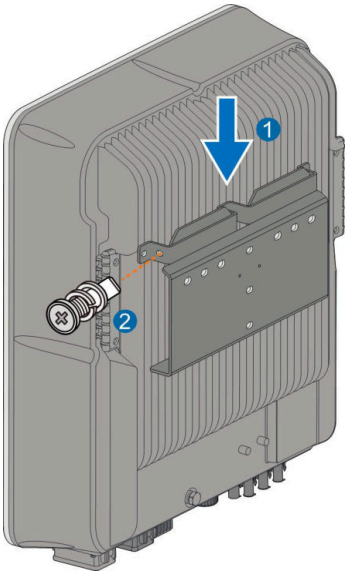

--End

6 Electrical Connection

6.1 Safety Instructions

⚠ DANGER

The PV string will generate lethal high voltage when exposed to sunlight.

- **Operators must wear proper personal protective equipment during electrical connections.**
- **Must ensure that cables are voltage-free with a measuring instrument before touching DC cables.**
- **Respect all safety instructions listed in relevant documents about PV strings.**

⚠ DANGER

- **Before electrical connections, please make sure that the inverter switch and all switches connected to the inverter are set to "OFF", otherwise electric shock may occur!**
- **Ensure that the inverter is undamaged and all cables are voltage free before performing electrical work.**
- **Do not close the AC circuit breaker until the electrical connection is complete.**

⚠ DANGER

Batteries deliver electric power, resulting in burns or a fire hazard when they are short circuited, or wrongly installed.
Lethal voltages are present at the battery terminals and cables connecting to the inverter. Severe injuries or death may occur if the cables and terminals in the inverter are touched.

⚠ WARNING

Damage to the product caused by incorrect wiring is not covered by the warranty.

- **Electrical connection must be performed by professionals.**
- **Operators must wear proper personal protective equipment during electrical connections.**
- **All cables used in the PV generation system must be firmly attached, properly insulated, and adequately dimensioned.**

NOTICE

All electrical connections must comply with local and national / regional electrical standards.

- **Cables used by the user shall comply with the requirements of local laws and regulations.**
- **Only with the permission of the national / regional grid department, the inverter can be connected to the grid.**

NOTICE

- **Before connecting a power cable (such as the AC cable, the DC cable, etc.), confirm that the label and identifier on the power cable are correct.**
- **Please make sure to divide the AC output cable from the DC input cable during the electrical connetction to avoid any possible short circuit.**
- **When laying out communication cables, separate them from power cables and keep them away from strong interference sources to prevent communication interruption.**

NOTICE

All vacant terminals must be covered with waterproof covers to prevent affecting the protection rating.
When the wiring is completed, seal the gap of cable inlet and outlet holes with fireproof / waterproof materials such as fireproof mud to prevent foreign matter or moisture from entering and affecting the long-term normal operation of the inverter.
Comply with the safety instructions related to PV strings and the regulations related to the utility grid.

- If excessive loads are connected to the inverter backup port, the inverter will shut down for protection. Please remove some loads and restart the inverter.
- The cable colors in figures in this manual are for reference only. Please select cables according to local cable standards.

6.2 Terminal Description

All electrical terminals are located at the bottom of the inverter.

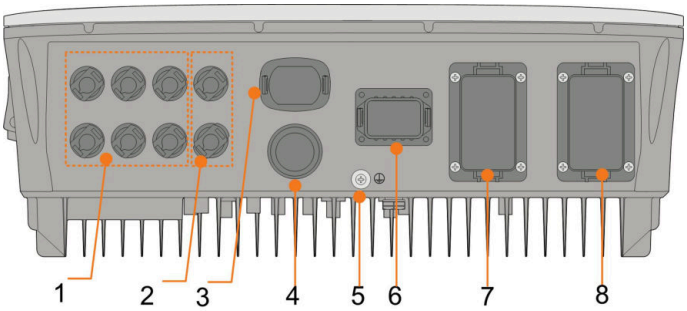

Figure 6-1 Terminals at the Bottom of the Inverter

* The image shown here is for reference only. The actual product received may differ.

No.	Name	Description
1	PV terminals	Positive and negative DC input connectors Two or three pairs, depending on the inverter model
2	Battery connection	Connectors for the battery power cables
3	WLAN terminal	Connector for the WiNet—S module
4	LAN terminal	Connector for the EMS, router, and data logger
5	Additional grounding terminal	For reliable grounding
6	COM terminal	Connector for Smart Energy Meter, Sungrow AC011E-01/AC22E-01 EV Charger, RS485, BMS/CAN, DRM/DI/Ripple Control Receiver and DO
7	BACK-UP terminal	AC terminal reserved for Backup loads
8	GRID terminal	AC terminal for connection to the utility grid

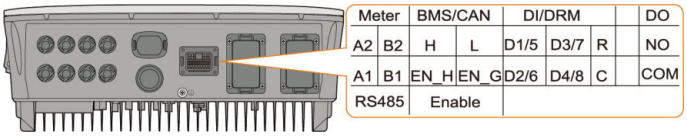

Figure 6-2 The label description of COM terminal

Table 6-1 The label description of COM terminal

No.	Label	Description
1	Meter (A2, B2) (1)	• Connect to the Smart Energy Meter.(If installing a single inverter or if installing the master inverter in a string of parallel inverters.) • Connect to the Sungrow AC011E-01/AC22E-01 EV Charger • Enable the communication between inverters in parallel. (If installing a slave inverter in a string of parallel inverters.)
2	RS485 (A1, B1) (1)(2)	• Connect to the Sungrow AC011E-01/AC22E-01 EV Charger (The default charger interface) • Connect to an external device to receive the command to shut down the inverter remotely (Italy only) or enable the communication between inverters in parallel. (If installing a master inverter in a string of parallel inverters.)
3	BMS/CAN	To enable the communication between the inverter and the Li-ion battery
4	Enable	Reserved
5	DI/DRM	• "AU"/"NZ": Demand response enabling device (DRED) • "IT": interface protection system (SPI) • "DE": Ripple Control Receiver (RCR)
6	DO	• Connect to an external light indicator and/or buzzer to signal an alarm. • Connect to home load (such as SG Ready Heat Pump) for power management.

(1) When the inverter is connected to a third-party monitoring device, please confirm which communication interface is used, and whether it will cause loss of certain functions of the inverter.

(2) When RS485 (A1, B1) is used for parallel connection in the master inverter, the LG Chem battery (that uses RS485 for communication) cannot be used with the master inverter. It can still be used with the slave inverter.

6.3 Electrical Connection Overview

System Wiring Diagram

The electrical connection should be realized as follows:

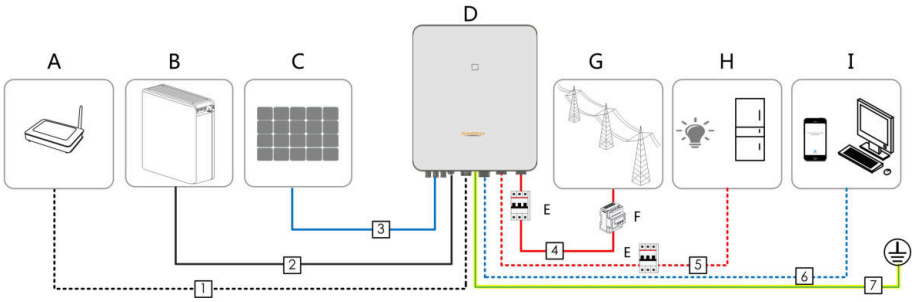

(A) Router	(B) Battery	(C) PV string
(D) Inverter	(E) AC circuit breaker	(F) Smart Energy Meter
(G) Grid	(H) Backup loads	(I) Monitoring device

⚠ WARNING

Install an AC circuit breaker on the backup side. Otherwise, an electrical short circuit may occur, causing damage to the inverter.

NOTICE

Ensure that AC output cables are firmly connected. Failing to do so may cause inverter malfunction or damage to its AC connectors.

NOTICE

Make sure not to switch the phase order (L1-L3) which may cause malfunction.

Table 6-2 Cable requirements

No.	Cable	Type	Specification	
			Outer diameter	Cross section
1	Ethernet cable	CAT 5E outdoor shielded network cable	5.3 ~ 7 mm	8 * 0.2 mm²
2	Power Cable	Outdoor multi-core copper wire cable Complying with 1,000V and 35A standard	5.5 ~ 8 mm	4 mm²

No.	Cable	Type	Specification	
			Outer diameter	Cross section
		Outdoor multi-core copper wire cable Complying with 1,000V and 40A standard		6 mm²
3	DC cable	Outdoor multi-core copper wire cable Complying with 1,000V and 30A standard	6 ~ 9 mm	4 ~ 6 mm²
4	AC cable *	Outdoor multi-core copper wire cable	14 ~ 25 mm	6 ~ 10 mm²
5			12 ~ 14 mm	4 ~ 6 mm²
6	Communication cable	Shielded twisted pair	5.3 ~ 7 mm	2 * (0.5 ~ 1.0) mm²
		CAT 5E outdoor shielded network cable**		8 * 0.2 mm²
7	Additional Grounding cable *	Outdoor single-core copper wire cable	The same as that of the PE wire in the AC cable	

* If local regulations have other requirements for cables, set the cable specification according to the local regulations.

The factors that affect cable selection include rated current, cable type, routing mode, ambient temperature, and maximum expected line loss.

The cabling distance between the battery and the inverter should be less than 10 m, and within 5 m is recommended.

**To meet shielding and anti-interference requirements:

- Shielded Ethernet cables are mandatory.It is recommended to use CAT 5E or CAT 6 shielded cables.
- Use Ethernet cables with magnet cores at both ends, and in some cases, add magnet cores in the middle.

Backup Wiring Diagram(Australia and New Zealand)

The neutral cable of GRID side and BACK-UP side must be connected together according to the wiring rules AS/NZS_3000. Otherwise BACK-UP function will not work.

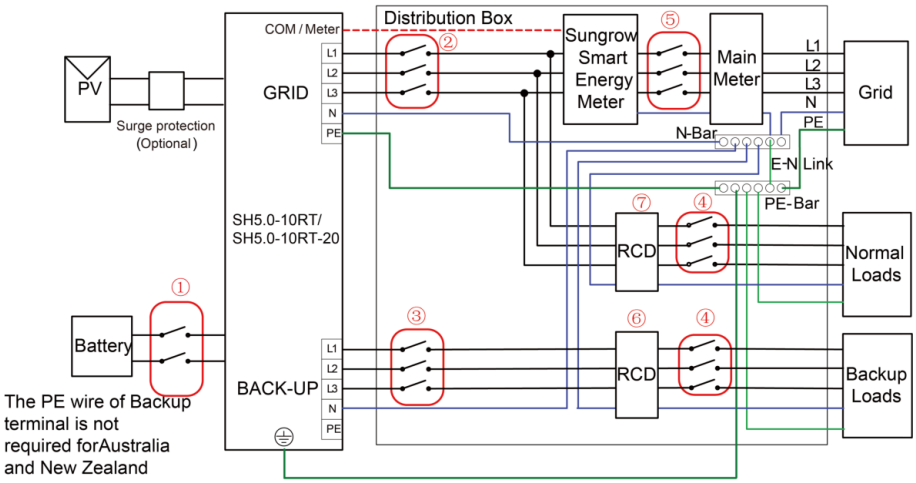

This wiring diagram is for reference only. Please confirm the actual wiring requirements for different regions with SUNGROW.

NO.	SH5.0/6.0RT/8.0/10RT	SH5.0/6.0RT/8.0/10RT-20
①	40A/600V DC breaker *	
②	32A/400V AC breaker	
③	25A/400V AC breaker	
④	Depends on loads	
⑤	Depends on household loads and inverter capacity	
⑥⑦	30mA RCD (Comply with local regulation)	

Note: * If the battery is integrated with a readily accessible internal DC breaker, no additional DC breaker is required.

Note: The values in the table are recommended values and can be set to other values according to actual conditions.

Backup Wiring Diagram (Other Countries)

The following diagram is an example for grid systems without special requirement on wiring connection.

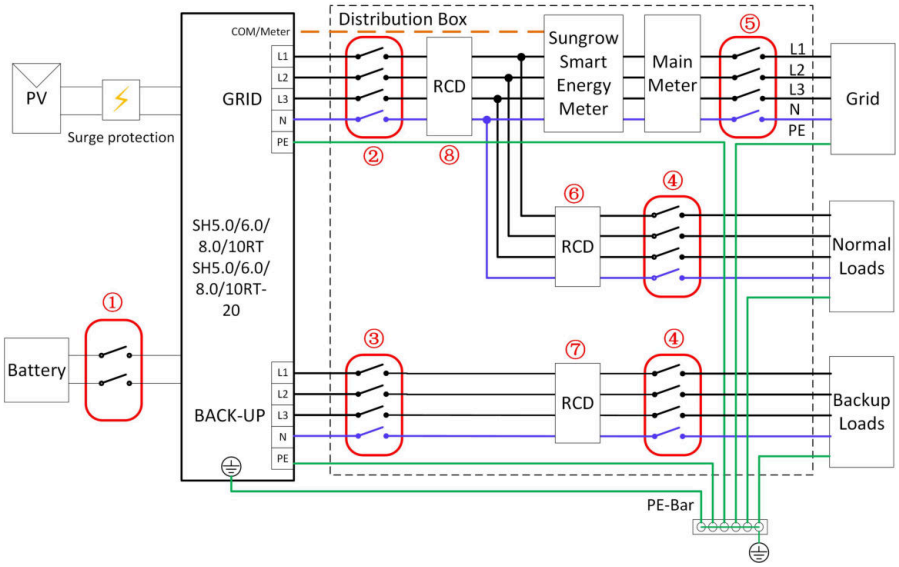

This wiring diagram is for reference only. Please confirm the actual wiring requirements for different regions with SUNGROW.

NO.	SH5.0/6.0RT/8.0/10RT	SH5.0/6.0RT/8.0/10RT-20
①	40A/600V DC breaker *	
②	32A/400V AC breaker	
③	25A/400V AC breaker	
④	Depends on loads	
⑤	Depends on household loads and inverter capacity (Optional)	
⑥⑦	30mA RCD (Recommended)	
⑧	300mA RCD (Recommended)	

Note: * If the battery is integrated with a readily accessible internal DC breaker, no additional DC breaker is required.

Note: The values in the table are recommended values and can be set to other values according to actual conditions.

Backup Wiring Diagram TT System

The following diagram is an example for grid systems without special requirement on wiring connection.

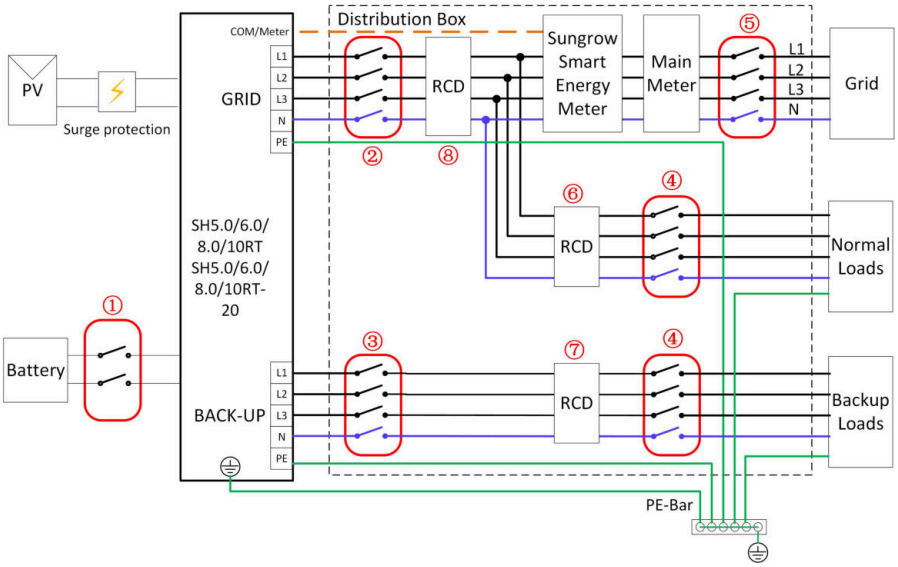

This wiring diagram is for reference only. Please confirm the actual wiring requirements for different regions with SUNGROW.

NO.	SH5.0/6.0RT/8.0/10RT	SH5.0/6.0RT/8.0/10RT-20
①	40A/600V DC breaker *	
②	32A/400V AC breaker	
③	25A/400V AC breaker	
④	Depends on loads	
⑤	Depends on household loads and inverter capacity	
⑥⑦	30mA RCD (Recommended)	
⑧	300mA RCD (Recommended)	

Note: * If the battery is integrated with a readily accessible internal DC breaker, no additional DC breaker is required.

Note: The values in the table are recommended values and can be set to other values according to actual conditions.

6.4 External Protective Grounding Connection

⚠ DANGER

- **There are large currents during the inverter's operation. If the inverter is powered on and put into operation without being grounded, it may lead to electric shock hazards or failures of major protective functions such as surge protection. Therefore, before powering on the inverter, make sure it has been reliably grounded; otherwise, damages caused therefrom will not be covered by warranty.**
- **When performing electrical connections of the inverter, give the highest priority to grounding. Be sure to carry out the grounding connection first.**

⚠ WARNING

- **Since the inverter is not equipped with a transformer, neither the negative electrode nor the positive electrode of the PV string can be grounded. Otherwise, the inverter will not operate normally.**
- **Connect the grounding terminal to the external protective grounding point before AC cable connection, PV string connection, and communication cable connection.**
- **The external protective grounding point provides a reliable ground connection. Do not use an improper grounding conductor for grounding, Otherwise, it may cause product damage or personal injury.**
- **Depending on Local Rules, please also ground the PV panel subconstruction to the same common grounding point (PE Bar) in addition to local lightning protection rules.**

⚠ WARNING

The external protective grounding terminal must meet at least one of the following requirements.

- **The cross-sectional area of the grounding cable is not less than 10 mm^2 for copper wire or 16 mm^2 for aluminum wire. It is recommended that both the external protective grounding terminal and the AC side grounding terminal be reliably grounded.**
- **If the cross-sectional area of the grounding cable is less than 10 mm^2 for copper wire or 16 mm^2 for aluminum wire, ensure that both the external protective grounding terminal and the AC side grounding terminal are reliably grounded.**

The grounding connection can be made by other means if they are in accordance with the local standards and regulations, and SUNGROW shall not be held liable for the possible consequences.

6.4.1 External Protective Grounding Requirements

All non-current carrying metal parts and device enclosures in the PV power system should be grounded, for example, brackets of PV modules and inverter enclosure.

When there is only one inverter in the PV system, connect the external protective grounding cable to a nearby grounding point.

When there are multiple inverters in the PV system, connect the external protective grounding terminals of all inverters and the grounding points of the PV module brackets to ensure equipotential connections to ground cables (according to the onsite conditions).

6.4.2 Connection Procedure

There are two additional grounding terminals located at the bottom and right side of the inverter. Connect either one.

External grounding cable is prepared by customers.

Step 1 Prepare the cable and OT/DT terminal.

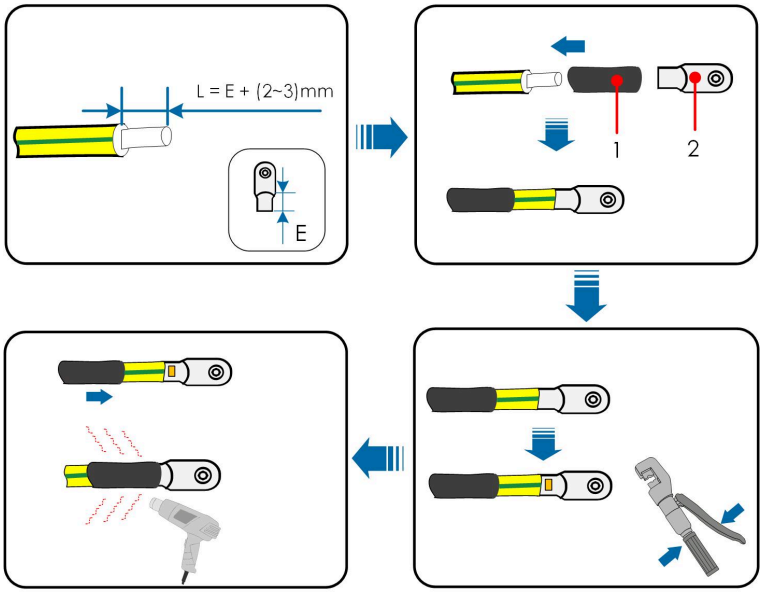

(1) Heat shrink tubing (2) OT/DT terminal

> After being crimped, the OT terminal must wrap the wires completely, and the wires must contact the OT terminal closely.
> When using a heat gun, protect the device from being scorched.

Step 2 Remove the screw on the grounding terminal and fasten the cable with a screwdriver.

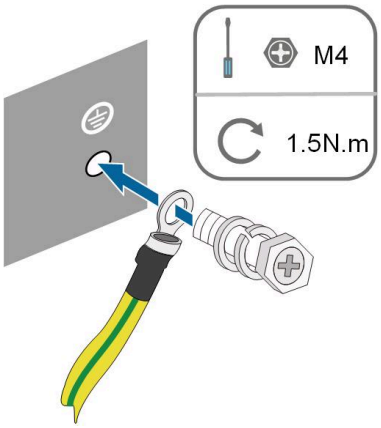

Step 3 Apply paint to the grounding terminal to ensure corrosion resistance.

--End

6.5 AC Cable Connection

6.5.1 AC Side Requirements

> Only with the permission of the local grid department, the inverter can be connected to the grid.

Before connecting the inverter to the grid, ensure the grid voltage and frequency comply with requirements, for which, refer to **"Technical Data"**. Otherwise, contact the electric power company for help.

AC Circuit Breaker

An independent three or four-pole circuit breaker must be installed on the output side of the inverter to ensure safe disconnection from the grid.

Inverter Model	Recommended Specification
SH5.0RT/SH5.0RT-20	25 A
SH6.0RT/SH6.0RT-20	
SH8.0RT/SH8.0RT-20	32 A
SH10RT/SH10RT-20	

⚠ WARNING

AC circuit breakers should be installed on the output side of the inverter and the grid side to ensure safe disconnection from the grid.

- **Determine whether an AC circuit breaker with greater overcurrent capacity is required based on actual conditions.**
- **Do not connect any local load between the inverter and the AC circuit breaker.**
- **Multiple inverters cannot share one AC circuit breaker.**

Residual Current Monitoring Device

With an integrated universal current-sensitive residual current monitoring unit included, the inverter will disconnect immediately from the mains power once a fault current with a value exceeding the limit is detected.

However if an external residual current device (RCD) is mandatory, the switch must be triggered at a residual current of 300 mA (recommended), or it can be set to other values according to local regulations. For example in Australia, the inverter can use an additional 30 mA(type A)RCD in installations.

6.5.2 Assembling the AC Connector

Prerequisite

The AC terminal block is on the bottom side of the inverter. AC connection is the three-phase-four-wire grid + PE connection (L1, L2, L3, N, and PE).

Step 1 Unscrew the swivel nut of the AC connector.

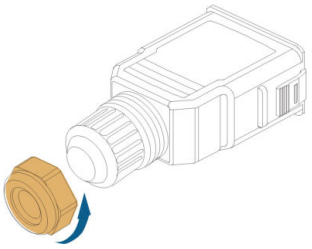

Step 2 **(Optional)** Remove the inner sealing ring if the cable diameter is between 19 mm ~ 25 mm. Otherwise skip this step.

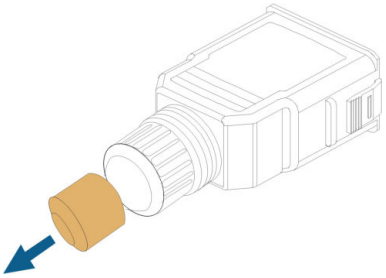

Step 3 Take out the terminal plug from the housing.

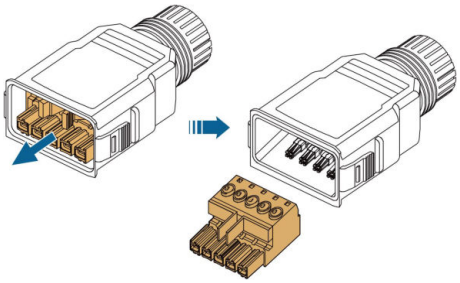

Step 4 Thread the AC cable of appropriate length through the swivel nut and the housing.

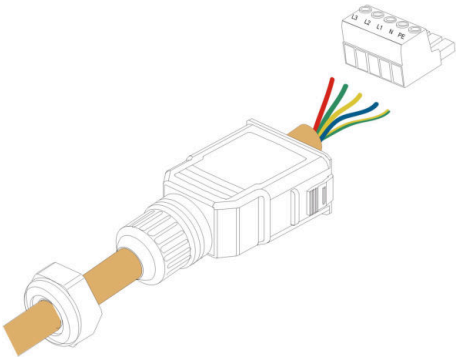

Step 5 Strip 80 mm ~ 90 mm of the cable jacked and 12 mm of the wire insulation.

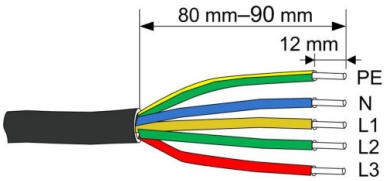

The color of the cable cores in the figure is for reference only, and cables or cable cores selected must meet local standards.

Step 6 **(Optional)** When using a multi-core multi-strand copper wire cable, connect the AC wire head to the cord end terminal (hand-tight). In case of single-strand copper wire, skip this step.

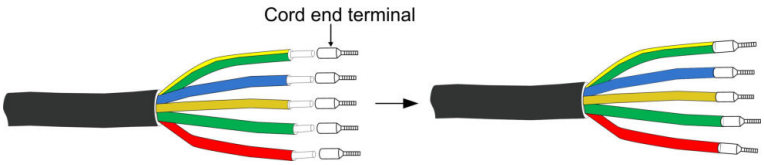

Select appropriate cord end terminal according to the cable cross-section area.

Step 7 Fix all the wires to the terminal plug according to the assignment and tighten to a torque of 1.2 N•m–1.5 N•m with a screwdriver. Then push the terminal plug into the housing until there is an audible click.

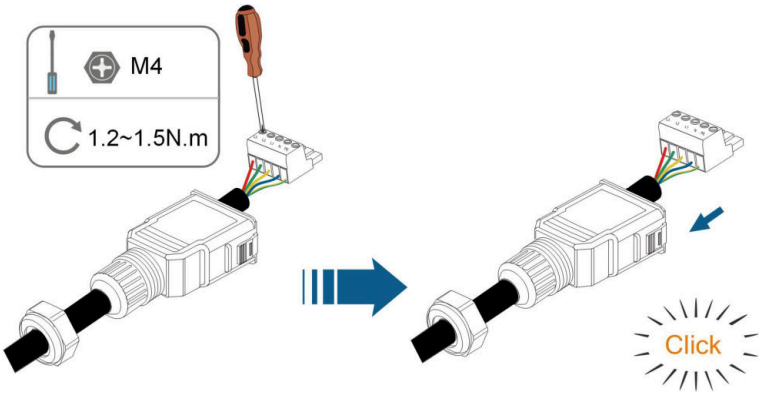

NOTICE

Observe the plug assignment. Do not connect any phase line to the "PE" terminal or the PE wire to the "N" terminal. Otherwise, unrecoverable damage to the inverter may follow.

Step 8 Ensure that the wires are securely in place by slightly pulling them. Tighten the swivel nut to the housing.

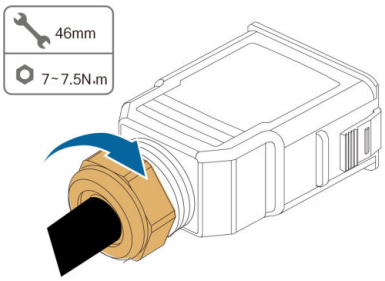

--End

6.5.3 Installing the AC Connector

Prerequisite

DANGER

High voltage may be present in inverter!
Ensure all cables are voltage-free before electrical connection.
Do not connect the AC circuit breaker until all inverter electrical connections are completed.

Step 1 Disconnect the AC circuit breaker and secure it against reconnection.

Step 2 Remove the waterproof lid from the **GRID** terminal.

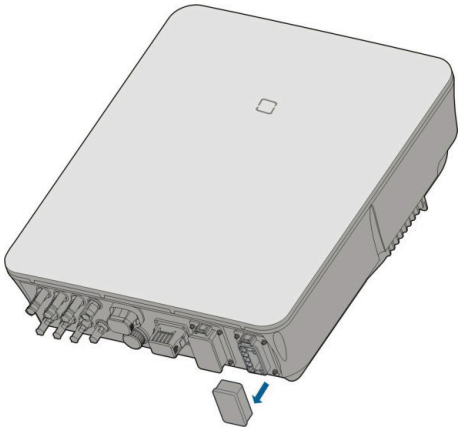

Step 3 Insert the AC connector into the **GRID** terminal on the bottom of the inverter until there is an audible sound.

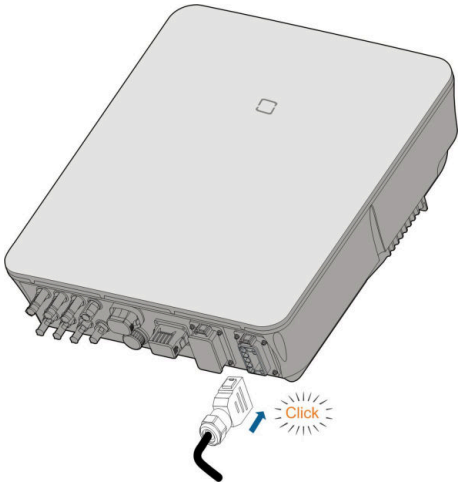

Step 4 **(Optional)** Insert the block into AC connector, as shown in the figure below.

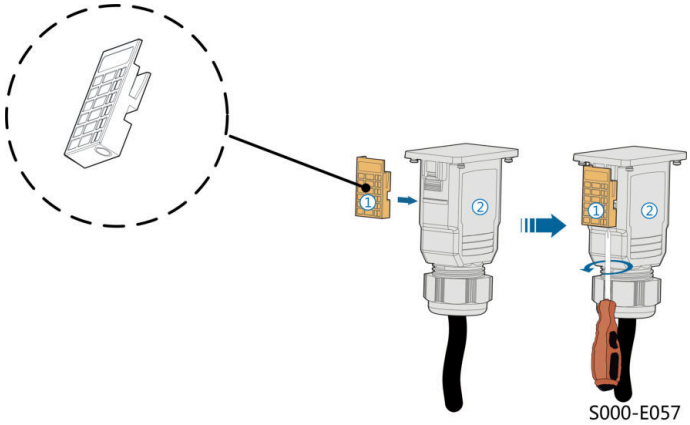

a. Insert block ① into AC connector ② from the side.

b. Tighten the screw on the bottom of block ①.

Step 5 Connect PE cable to ground.

Step 6 Connect phase cable and “N” cable to AC circuit breaker.

Step 7 Connect AC circuit breaker to utility grid.

Step 8 Make sure all AC cables are firmly installed via the right torque tool or dragging the cables slightly.

--End

6.6 DC Cable Connection

⚠ DANGER

The PV string will generate lethal high voltage when exposed to sunlight.

- **Respect all safety instructions listed in relevant documents about PV strings.**

⚠ WARNING

- **Make sure the PV array is well insulated to ground before connecting it to the inverter.**
- **Make sure the maximum DC voltage and the maximum short circuit current of any string never exceed inverter permitted values specified in "Technical Data".**
- **Check the positive and negative polarity of the PV strings, and connect the PV connectors to corresponding terminals only after ensuring polarity correctness.**
- **During the installation and operation of the inverter, please ensure that the positive or negative electrodes of PV strings do not short-circuit to the ground. Otherwise, an AC or DC short-circuit may occur, resulting in equipment damage. The damage caused by this is not covered by the warranty.**
- **Electric arc or contactor over-temperature may occur if the DC connectors are not firmly in place, and the loss caused is not covered by the warranty.**
- **If the DC input cables are reversely connected or the positive and negative terminals of different MPPT are shorted to ground at the same time, while the DC switch is in the "ON" position, do not operate immediately. Otherwise, the inverter may be damaged. Please turn the DC switch to "OFF" and remove the DC connector to adjust the polarity of the strings when the string current is lower than 0.5 A.**
- **Use the DC connectors supplied with the product for DC cable connection. Using incompatible DC connectors may result in serious consequences, and the device damage is not covered under warranty.**
- **Do not connect one PV string to multiple inverters. Otherwise, the inverters may be damaged.**

⚠ WARNING

Before connecting the PV array to the inverter, ensure that the impedances between the positive terminals of the PV string and earth, and between the negative terminals of the PV string and earth are larger than 1 M Ohm.

NOTICE

The following requirements about PV string connection must be met. Otherwise, it may cause irreversible damage to the inverter, which is not covered by the warranty.

- **Mixed use of PV modules of different brands or models in one MPPT circuit, or PV modules of different orientation or inclination in a string may not damage inverter, but will cause system bad performance!**

6.6.1 PV Input Configuration

In Australia and New Zealand, ensure the DC power for any PV string never exceeds a certain level with regards to the string voltage to avoid derating:

≤ 12.5 kW if string voltage is lower than 500 V

≤ 10 kW if string voltage is between 500 V and 800 V

≤ 8 kW if string voltage is between 800 V and 1000 V

For SH5.0/6.0/8.0RT/SH5.0–8.0RT-20, each PV input operates independently and has its own MPPT. In this way, string structures of each PV input may differ from each other, including PV module type, number of PV modules in each string, angle of tilt, and installation orientation.

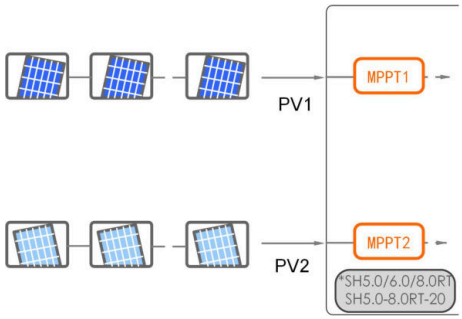

For SH10RT/SH10RT-20, each pair of PV terminals is corresponding to an independent PV string. PV input PV1 connect to MPPT1 and PV2, PV3 connect to MPPT2. For the best use of PV power, PV2 and PV3 should be the same in PV string structure, including the type, number, tilt, and orientation of the PV modules.

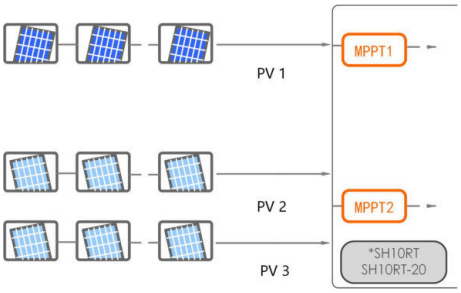

For SH10RT/SH10RT-20, if two PV strings are paralleled externally, the paralleled strings can be connected to PV2 or PV3 only, and the other one cannot be used to connect other PV strings.

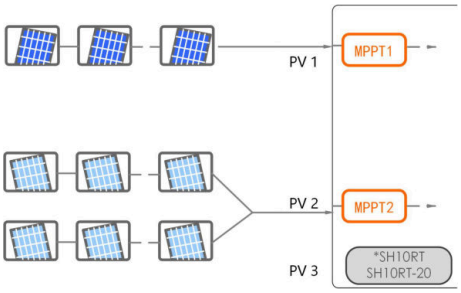

Prior to connecting the inverter to PV inputs, the following electrical specifications must be met simultaneously:

Model	Open-circuit Voltage Limit	Max. current for Input Connector
SH5.0RT/SH5.0RT-20	1000 V	30 A
SH6.0RT/SH6.0RT-20		
SH8.0RT/SH8.0RT-20		
SH10RT/SH10RT-20		

> The output voltage of strings should all exceed the lower limit of the full load MPPT voltage range.

6.6.2 Assembling the PV Connectors

Prerequisite

⚠ DANGER

High voltage may be present in the inverter!

- **Ensure all cables are voltage-free before performing electrical operations.**
- **Do not connect the DC switch and AC circuit breaker before finishing electrical connection.**

To ensure IP65 protection, use only the supplied connector.

Step 1 Strip the insulation from each DC cable by about 7 mm.

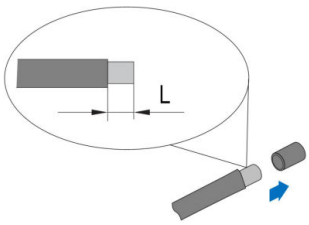

Step 2 Assemble the cable ends with the crimping pliers.

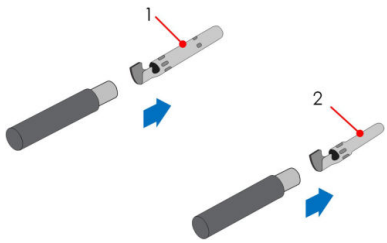

1: Positive crimp contact 2: Negative crimp contact

Step 3 Lead the cable through cable gland, and insert the crimp contact into the insulator until it snaps into place. Gently pull the cable backward to ensure firm connection. Tighten the cable gland and the insulator (torque 3.4 N.m to 3.5 N.m).

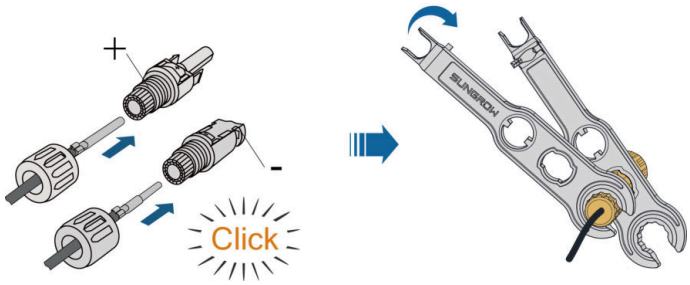

Step 4 Check for polarity correctness.

NOTICE

If the PV polarity is reversed, the inverter will be in a fault or alarm state and will not operate normally.

--End

6.6.3 Installing PV Connector

Step 1 Rotate the DC switch to “OFF” position.

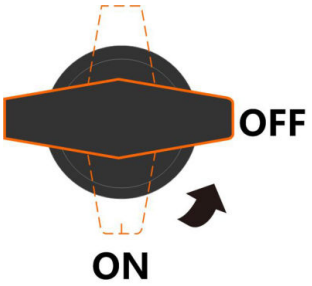

Step 2 Check the cable connection of the PV string for polarity correctness and ensure that the open circuit voltage in any case does not exceed the inverter input limit of 1,000V.

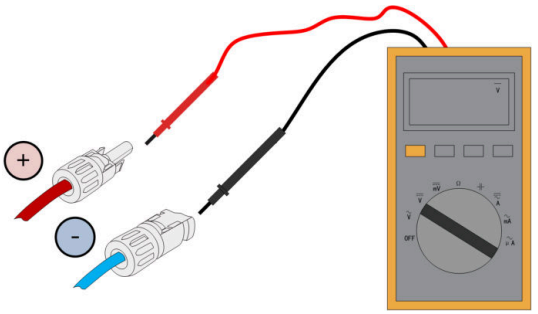

NOTICE

The multimeter must have a DC voltage range of at least 1,000 V. If the voltage is a negative value, the DC input polarity is incorrect. Please correct the DC input polarity. If the voltage is greater than 1,000 V, too many PV modules are configured to the same string. Please remove some PV modules.

Step 3 Connect the PV connectors to corresponding terminals until there is an audible click.

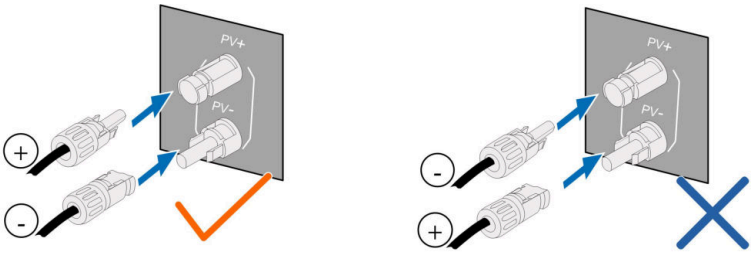

Step 4 Follow the foregoing steps to connect PV connectors of other PV strings.

Step 5 Seal any unused PV terminal with a terminal cap.

SUNGROW inverters cannot be used with third-party optimizers.
If the PV string is equipped with the optimizer, please refer to the optimizer manual for electrical connections and make sure that the polarity of the optimizer cables is correct.

--End

6.7 Communication Connection

WLAN function

With the WiNet-S2 module installed, view corresponding information through iSolarCloud App or iSolarCloud Web.

With the WiNet-S module installed, view corresponding information through iSolarCloud App or iSolarCloud Web.

LAN function

Through the Modbus TCP/IP protocol, the EMS or the Logger from the third party can fully control the on/off, derating, charging and discharging of the inverter.

RS485 function

The RS485 communication interfaces are used to establish communication connection with monitoring devices.

6.7.1 Ethernet Connection

Starting from version 95.05, the network port is disabled by default. Enabling the network port may pose network security risks. On-site version upgrades will not alter the current network port status. For any issues, please contact SUNGROW.

6.7.1.1 Assembling the LAN Connector

Prerequisite

Skip step 1 if the standard network cable with RJ45 plug is prepared.

Step 1 **(Optional)** Strip the insulation layer of the communication cable with an Ethernet wire stripper, and lead the corresponding signal cables out. Insert the stripped communication cable into the RJ45 plug in the correct order, and crimp it with a crimper.

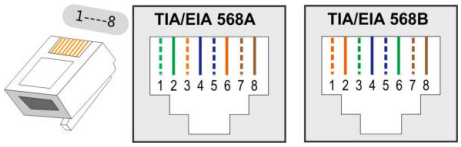

Step 2 Unscrew the swivel nut from the connector.

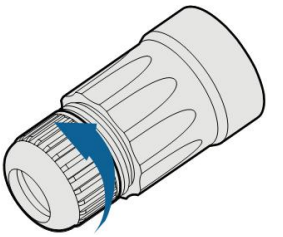

Step 3 Remove the inner rubber gasket.

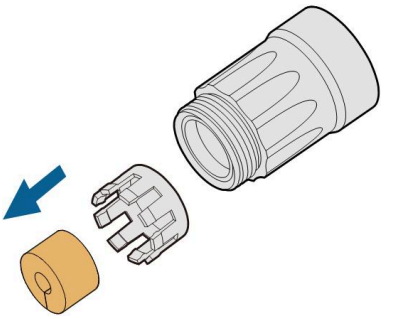

Step 4 Insert the RJ45 plug into the front plug connector until there is an audible click, and install the rubber gasket.

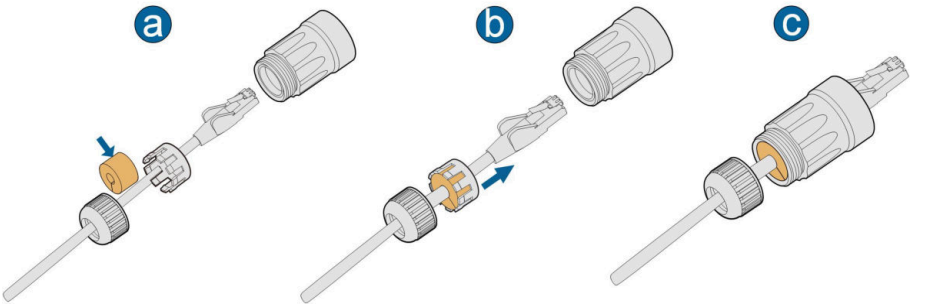

--End

6.7.1.2 Installing the LAN Connector

Step 1 Unscrew the waterproof lid from the **LAN** terminal.

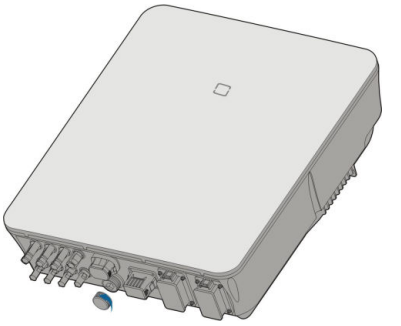

Step 2 Insert the LAN connector into **LAN** terminal on the bottom of the inverter.

Step 3 Pull cables outwards to confirm whether they are fastened firmly, then tighten the swivel nut with appropriate torque.

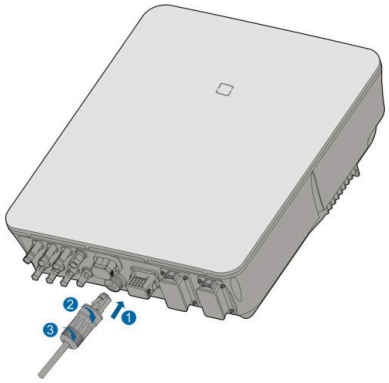

--End

6.7.2 WiNet-S Connection

The WiNet-S module supports Ethernet communication and WLAN communication. It is not recommended to use both communication methods at the same time.

For details, see the quick guide for the WiNet-S module. Scan the following QR code for the quick guide.

6.7.2.1 Ethernet Communication

Step 1 **(Optional)** Strip the insulation layer of the communication cable with an Ethernet wire stripper, and lead the corresponding signal cables out. Insert the stripped communication cable into the RJ45 plug in the correct order, and crimp it with a crimper.

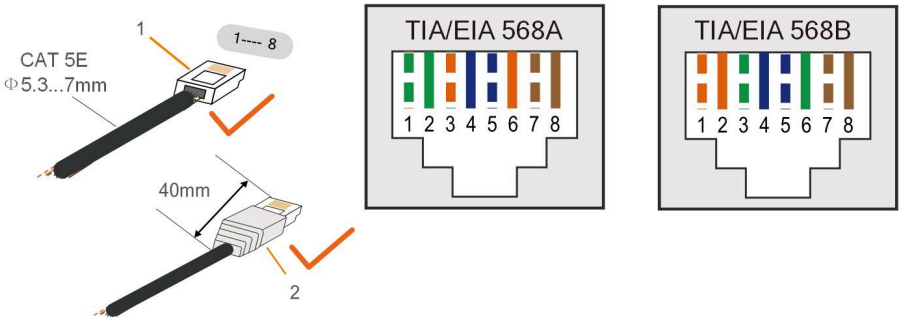

1: RJ45 plug 2: Protective cap

Skip this step if a standard network cable with RJ45 plug is prepared.

Step 2 Unscrew the swivel nut from the communication module and take out the inner sealing ring.

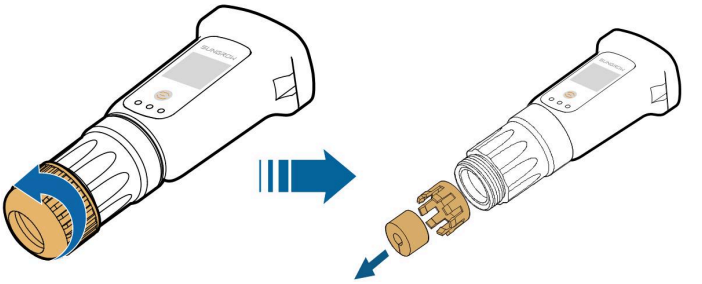

Step 3 Unscrew the housing from the communication module.

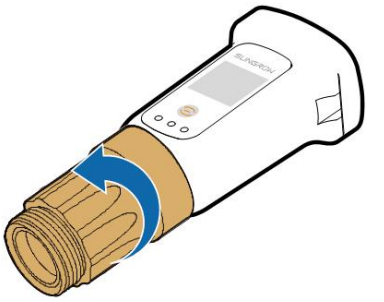

Step 4 Thread the network cable through the swivel nut and gasket. Afterwards, route the cable into the opening of the sealing. Finally, insert the cable through the housing.

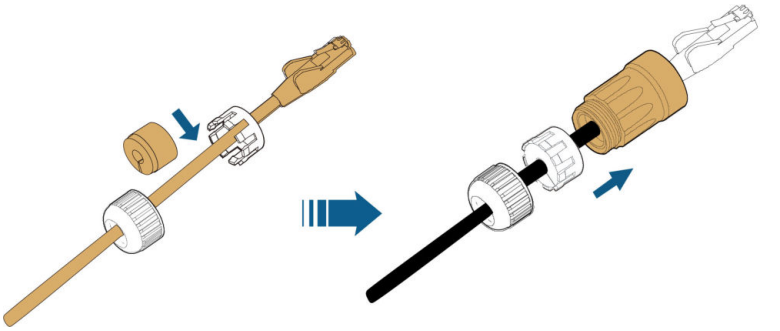

Step 5 Insert the RJ45 plug into the front plug connector until there is an audible click and tighten the housing. Install the gasket and fasten the swivel nut.

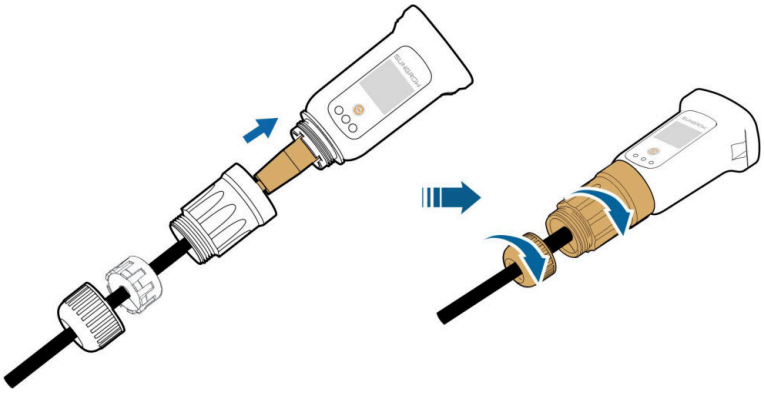

Step 6 Remove the waterproof lid from the **WLAN**terminal and install WiNet-S.

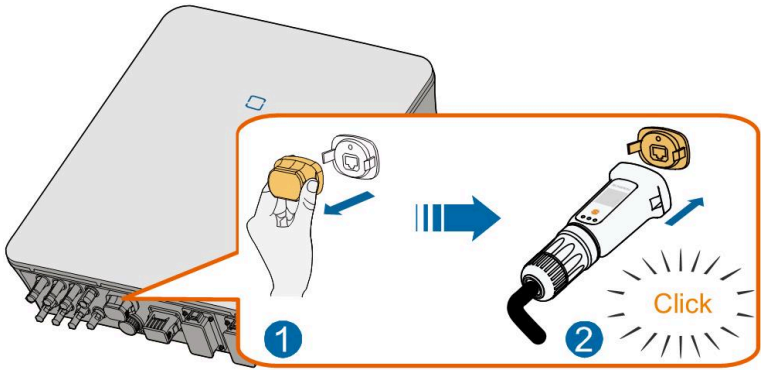

Step 7 Slightly shake it by hand to determine whether it is installed firmly.

--End

6.7.2.2 WLAN Communication

Step 1 Remove the waterproof lid from the **WLAN** terminal.

Step 2 Install the module. Slightly shake it by hand to determine whether it is installed firmly, as shown below.

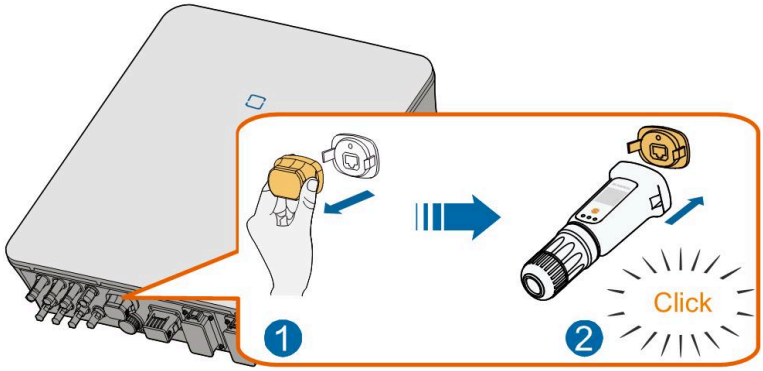

Step 3 Refer to the guide delivered with the module for the set-up.

--End

6.7.3 RS485 Connection

Where there is only one inverter, the RS485 can be connected to an external device for the communication.

Where there are two or more inverters in parallel, the RS485 connection enables the communication between master inverter and slave inverter, as shown in the following figure.

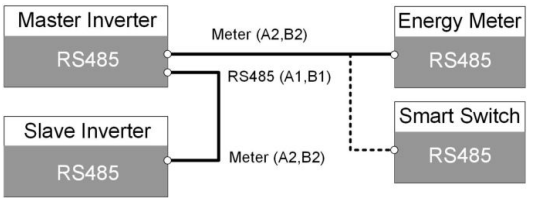

6.7.3.1 Assembling the COM Connector

Step 1 Unscrew the swivel nut from the connector.

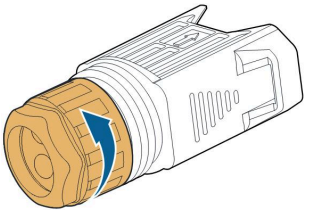

Step 2 Take out the terminal block.

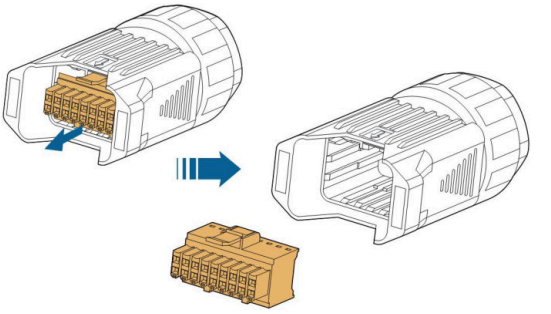

Step 3 Remove the seal and lead the cable through the cable gland.

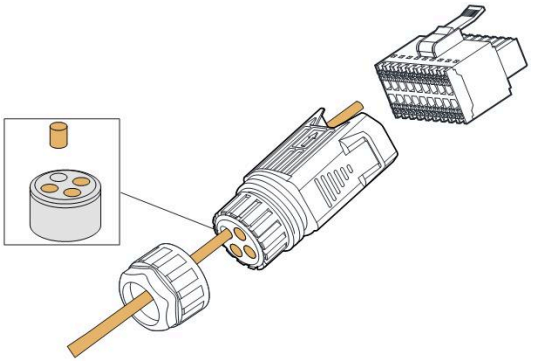

Step 4 Remove the cable jacket and strip the wire insulation.

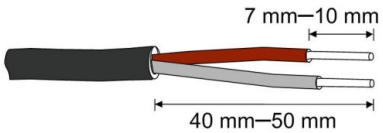

Step 5 Plug the wires into the **RS485** terminal according the labels on the bottom of the inverter.

For example for connecting the energy meter, connect the RS485 cables to A2,B2.

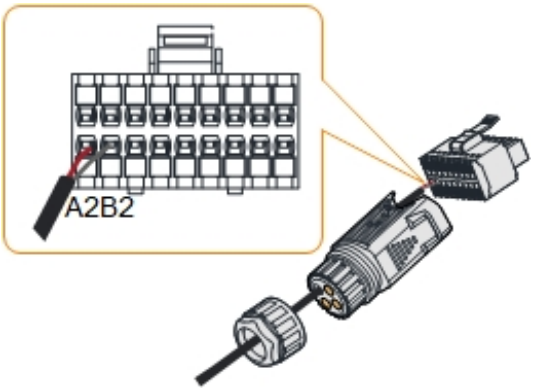

Step 6 Pull the wires outward to check whether they are firmly installed.

Step 7 Insert the terminal block into the connector until it snaps into place with an audible click.

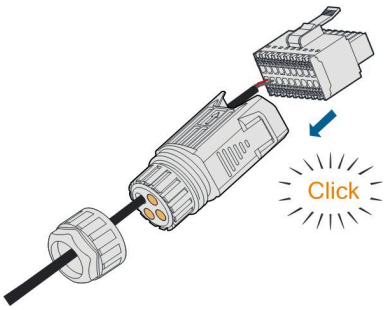

Step 8 Fasten the swivel nut.

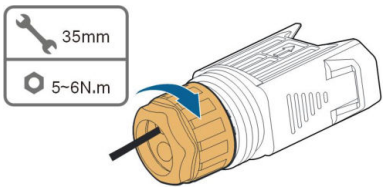

--End

6.7.3.2 Installing the COM Connector

Step 1 Remove the waterproof lid from the **COM** terminal.

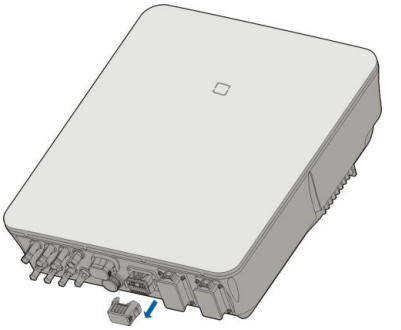

Step 2 Insert the COM connector into **COM** terminal on the bottom of the inverter until there is an audible click.

--End

6.8 Smart Energy Meter Connection

The inverter is equipped with the feed-in power limit function, so as to meet the requirements of some national standards or grid standards for the output power at the grid connection point. The export control functionality has not been tested to AS/NZS 4777.2:2020.

> Contact SUNGROW to ensure that the Smart Energy Meter model is available locally.
> This section mainly describes the cable connections on the inverter side. Refer to the quick guide delivered with the Smart Energy Meter for the connections on the meter side.
> The energy meter is mainly used to detect the direction and magnitude of the current. And the energy meter data may not be used for billing purposes.

Procedure

For detailed connection description of the Smart Energy Meter cable, refer to the section 6.7.3 RS485 Connection.

- If the Smart Energy Meter DTSU666 is used (provided in the box), please connect Pin24 on the meter to Pin A2 on the inverter and Pin 25 on the meter to Pin B2 on the inverter.

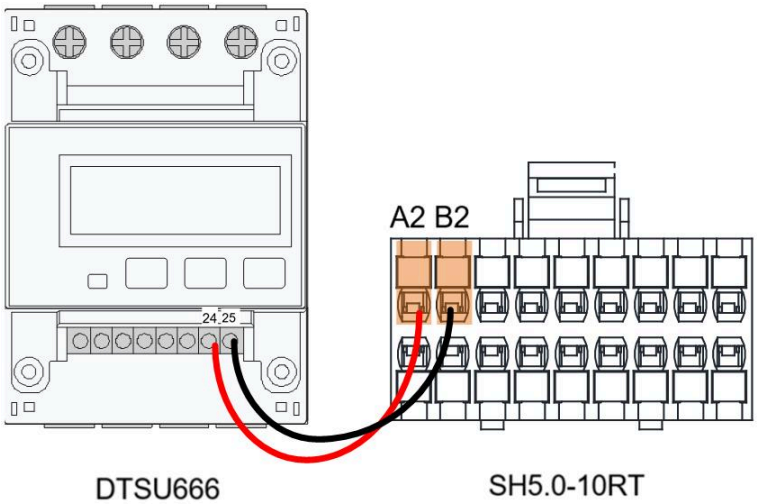

- If the communication distance (L) ≤ 10m, use a RS485 communication cable for connection directly, if 10m < L ≤ 50m, add an extra 120Ω resistor to improve the communication quality.

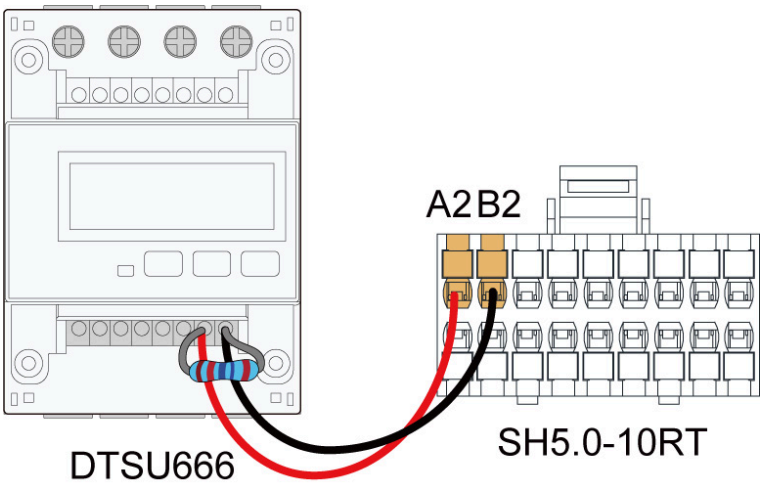

- For SH5.0–10RT-20, please connect Pin A on the smart energy meter DTSU666–20 to Pin A2 on the inverter and Pin B on the meter to Pin B2 on the inverter.

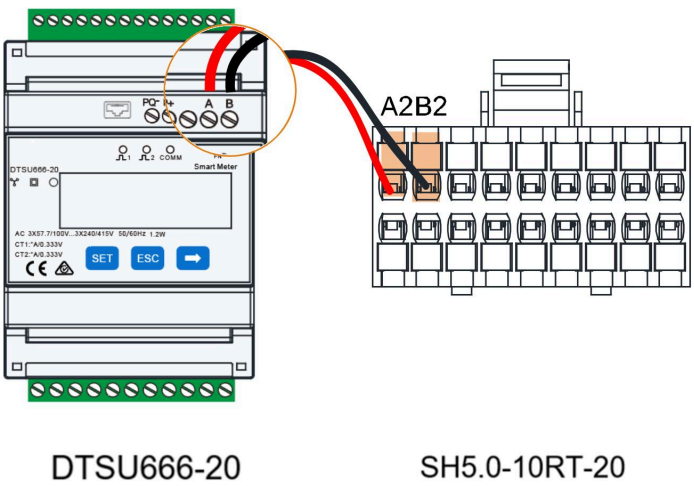

- If the communication distance (L) ≤ 10m, use a RS485 communication cable for connection directly, if 10m < L ≤ 50m, add an extra 120Ω resistor to improve the communication quality.

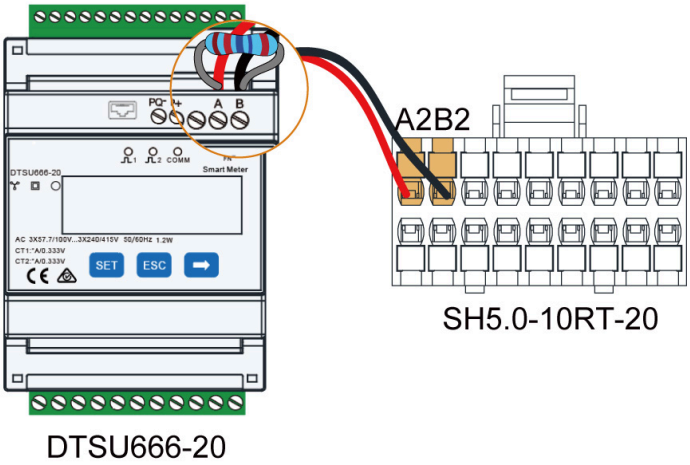

For more information on meters, including CT installation, consult the DTSU666–20 quick installation guide **support.sungrowpower.com**. Before installing, please carefully check the contents of the meter manual.

- If electricity meters of other brands are used, please refer to the corresponding electric meter manual.

6.9 Battery Connection

This section mainly describes the cable connections on the inverter side. Refer to the instructions supplied by the battery manufacturer for the connections on the battery side and configuration.

⚠ WARNING

Only use properly insulated tools to prevent accidental electric shock or short circuits. If insulated tools are not available, use electrical tape to cover the entire exposed metal surfaces of the available tools except their tips.

⚠ WARNING

The plug connector must be connected only by trained electricians.

⚠ WARNING

Do not disconnect under load!
Battery connectors must not be disconnected while under load. They can be placed in a no load state by shutting down the inverter completely.

⚠ WARNING

During the installation and operation of the inverter, please ensure that the positive or negative polarities of batteries do not short-circuit to the ground. Otherwise, an AC or DC short-circuit may occur, resulting in equipment damage. The damage caused by this is not covered by the warranty.

If the hybrid inverter is not connected to a battery, it will not support reliably the backup function.
The battery should be connected to the common grounding of the house (PE Bar) rather than directly to the inverter PE.
The energy in the battery will not backfeed into the PV modules.

6.9.1 Connecting the Power Cable

⚠ WARNING

Do not connect loads between the inverter and the battery. The battery cables should be connected correctly. That is, the positive and negative terminals of the battery connect to the positive and negative terminals on the inverter respectively. Otherwise, the inverter may be damaged, or even a fire could happen.

All power cables are equipped with water-proof direct plug-in connectors, which match the battery terminals at the bottom of the inverter.

The Sungrow SBR batteries are equipped with a DC circuit breaker, If there is no DC circuit breaker inside the battery, install an external DC circuit breaker between the inverter and the battery to ensure that the inverter can be safely disconnected from the battery. Ensure that cables are correctly connected between the external DC circuit breaker and the battery, and between the external DC circuit breaker and the inverter.

6.9.1.1 Assembling the SUNCLIX Connector

Prerequisite

NOTICE

During assembly, be careful not to contaminate, pull out, or shift, the seal in the cable gland. A contaminated or shifted seal impairs strain relief and leak tightness.

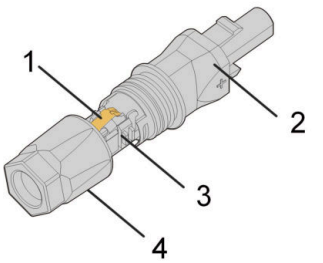

Figure 6-3 SUNCLIX Connector Components

1: Spring	2: Sleeve	3: Insert	4: Cable gland

Step 1 Strip the insulation from the cable by 15 mm.

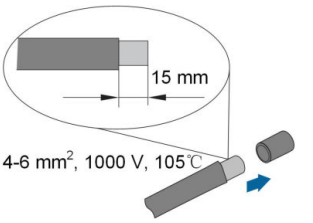

Step 2 Pry the connection open and pull the sleeve and the insert apart.

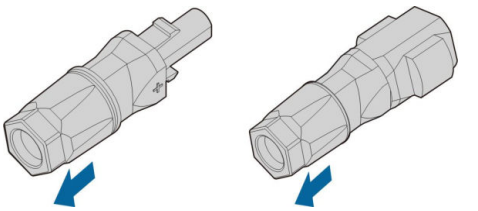

Step 3 Insert the stripped cable into the cable gland up to the stop. The stranded wire can be seen inside the spring. Press the spring down until it audibly snaps into place.

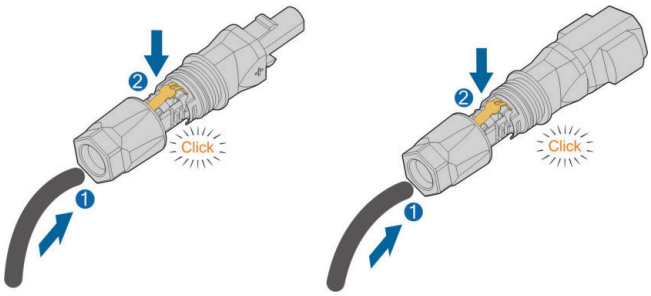

Step 4 Push the insert into the sleeve and tighten the cable gland (torque 2 N·m).

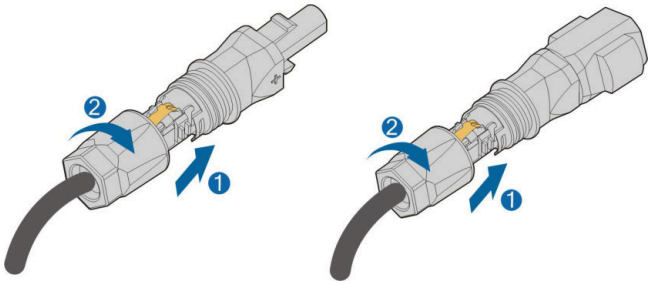

--End

6.9.1.2 Installing the SUNCLIX Connector

Prerequisite

NOTICE

Only connect these connectors with other SUNCLIX connectors. When making the connections, always observe the specifications regarding nominal voltage and nominal current. The smallest common value is permissible.

Step 1 Plug the connectors into **BAT+** and **BAT-** terminals.

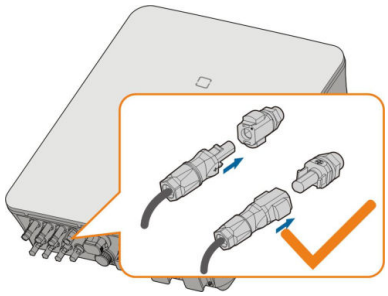

Step 2 Ensure that the connectors are securely in place.

--End

6.9.1.3 Assembling Evo2 Compatible Connector

Prerequisite

The connector type is subject to the actual received device.

Step 1 Strip 15 mm of the insulation layer from each PV cable.

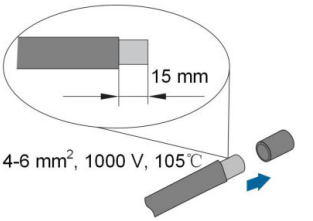

Step 2 Unscrew the swivel nut of the connector.

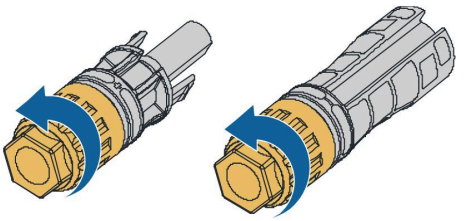

Step 3 Lead the stripped cable through the swivel nut and insert it into the insulation sleeve till the end.

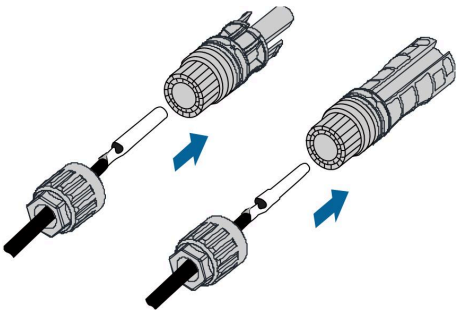

Step 4 Screw the swivel nut of the connector and gently pull the cable backward to ensure a firm connection.

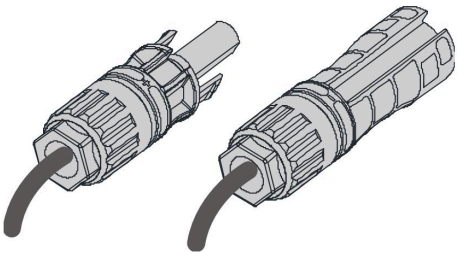

--End

6.9.1.4 Installing Evo2 Compatible Connector

Step 1 Insert the connector into the **BAT+** and **BAT-** terminals.

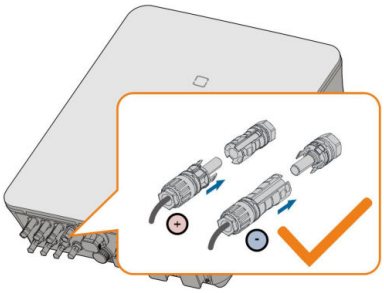

Step 2 Check for polarity correctness.

--End

6.9.2 Connecting the CAN Cable

The CAN cable enables the communication between the inverter and the Li-ion battery from SUNGROW.

Procedure

For detailed connection description of the CAN cable, refer to the section 6.7.3 RS485 Connection. Connect CAN High on the battery side to pin5 CANH on the hybrid inverter and CAN Low on Battery side to pin7 CANL on the hybrid inverter.

6.10 EV-Charger Communication Connection

The electrical connection of the Sungrow AC011E-01/AC22E-01 EV charger can be referred to the EV-Charger manual.

The inverter communicates with the EV charger through the RS485 communication interface.

Procedure

The EV charger has two RS485 communication ports, Port A and Port B. The communication cables shall be connected to corresponding ports. It is recommended to connect the Port A and Port B of the EV charger to Port A1 and Port B1 of the inverter by communication cables.

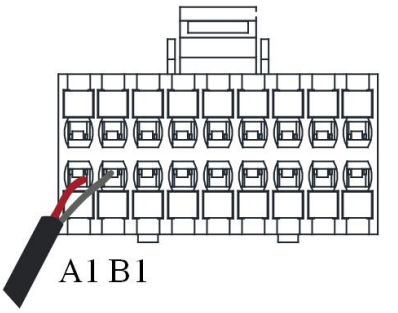

Connect the EV-Charger to A1 and B1.

6.11 DO Connection

The inverter has one DO relay with multiple functions as follows:

- Consumer load control. In this case the DO relay will control a contactor that will open or close in certain condition. Please choose the appropriate contactor according to the load power, e.g. the contactor types of the 3TF30 series from SIEMENS (3TF30 01-0X).
- Earth fault alarm. In this case, the additional equipment required is a light indicator and/or a buzzer.

Relay	Trigger condition	Description
Consumer load control	The load control mode has been set via the iSolarCloud App.	The relay is activated once the conditions of the control mode are satisfied.
Earth fault alarm	The earth fault occurs.	Once the inverter receives the earth fault signal, the relay closes the contact. The relay remains triggered until the fault is removed.

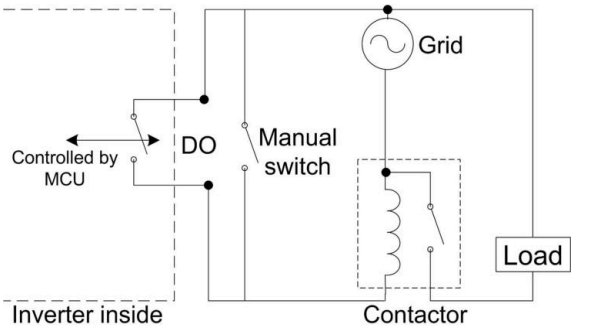

NOTICE

- **A DC signal of max 30V/3A or an AC contactor must be installed between the inverter and appliances. It is forbidden to connect the load directly to the DO port.**
- **The current of the DO dry contact should not be larger than 3 A.**
- **The DO node is not controlled once the inverter is powered off. Connect the AC contactor by the manual switch, so as to control the loads.**

Procedure

For detailed connection description of the DO cable, refer to the section 6.7.3 RS485 Connection. Plug the wires into the **DO** terminal according the labels on the bottom of the inverter.

6.12 DI Connection

DRM and Ripple Control support only one function at the same time.

DRM

The inverter supports the demand response modes as specified in the standard AS/NZS 4777. The inverter has integrated a terminal block for connecting to a DRED.

After the connection, the DRED assert DRMs by shorting together terminals as specified in the table below.

Table 6-3 Method of Asserting DRMs

Mode	Asserted by Shorting Terminals
DRM0	R & C
DRM1	D1/5 & C
DRM2	D2/6 & C
DRM3	D3/7 & C
DRM4	D4/8 & C
DRM5	D1/5 & R
DRM6	D2/6 & R
DRM7	D3/7 & R
DRM8	D4/8 & R

The inverter only supports DRM0 and the information is marked on the label located in the top of COM terminal.

Wiring between the inverter and the DRED is as follows.

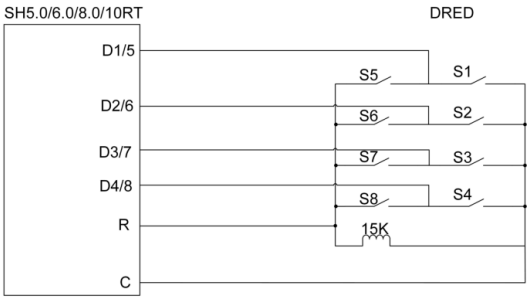

The switches that need to be closed in the state of DRM0 ~ DRM8 are shown in the table below.

Demand Response Mode	Operational Instruction	Switch state
DRM0	OI0	Close S1 and S5
DRM1	OI1	Close S1
DRM2	OI2	Close S2
DRM3	OI3	Close S3
DRM4	OI4	Close S4
DRM5	OI5	Close S5
DRM6	OI6	Close S6
DRM7	OI7	Close S7
DRM8	OI8	Close S8

Ripple Control

In Germany, the grid company uses the Ripple Control Receiver to convert the grid dispatching signal and send it as a dry contact signal.

Wiring of the ripple control receiver dry contact cables is shown in the figure below:

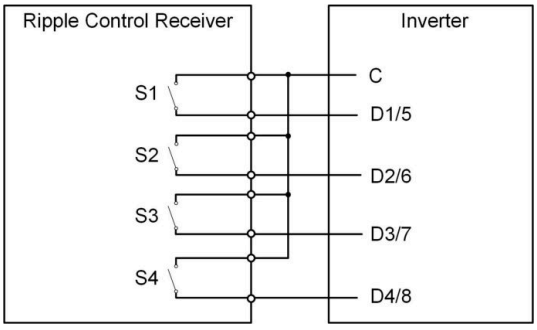

Table 6-4 Method of Asserting DI Mode

S 1	S 2	S 3	S 4	Switch Operation on External RCR	Output power (in % of the Rated AC output power)
0	0	0	0	None	100 % (configurable according to need)
1	0	0	0	Close S1	100 %
0	1	0	0	Close S2	60 %
0	0	1	0	Close S3	30 %
1	1	0	0	Close S1 and S2	0 % (disconnect from grid)

6.12.1 Assembling the COM Connector

Step 1 Unscrew the swivel nut from the connector.

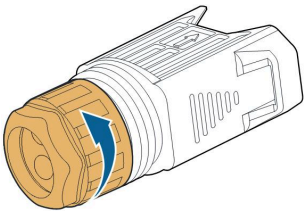

Step 2 Take out the terminal block.

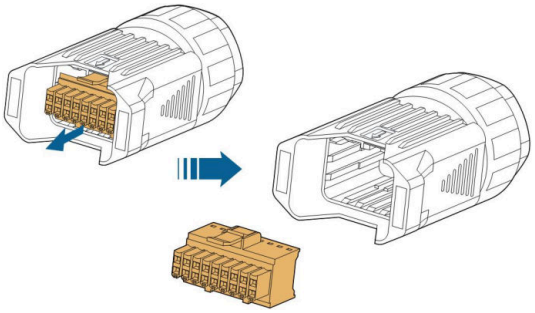

Step 3 Remove the seal and lead the cable through the cable gland.

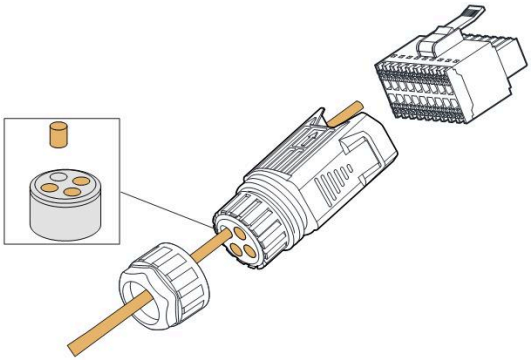

Step 4 Remove the cable jacket by 7 mm–10 mm.

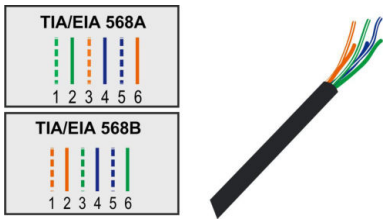

Step 5 Plug the wires into the corresponding terminal according the labels on the bottom of the inverter.

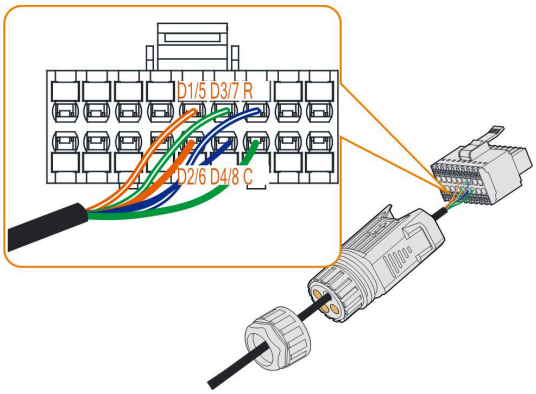

Step 6 Pull the wires outward to check whether they are firmly installed.

Step 7 Insert the terminal block into the connector until it snaps into place with an audible click.

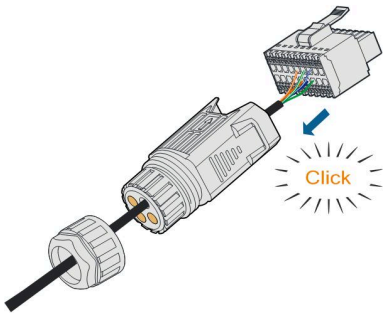

Step 8 Fasten the swivel nut.

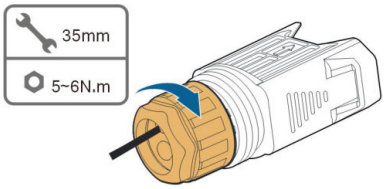

--End

6.12.2 Installing the COM Connector

Step 1 Remove the waterproof lid from the **COM** terminal.

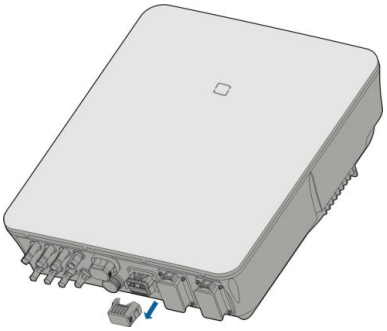

Step 2 Insert the COM connector into **COM** terminal on the bottom of the inverter until there is an audible click.

Step 3 Pull cables outwards to confirm whether they are fastened firmly.

Step 4 Connect the other end to the DRED / Ripple Control Receiver device.

--End

6.13 Backup Connection

Step 1 If no emergency load is connected to the Backup terminal, be sure to insert the Backup connector into the terminal to ensure safety.

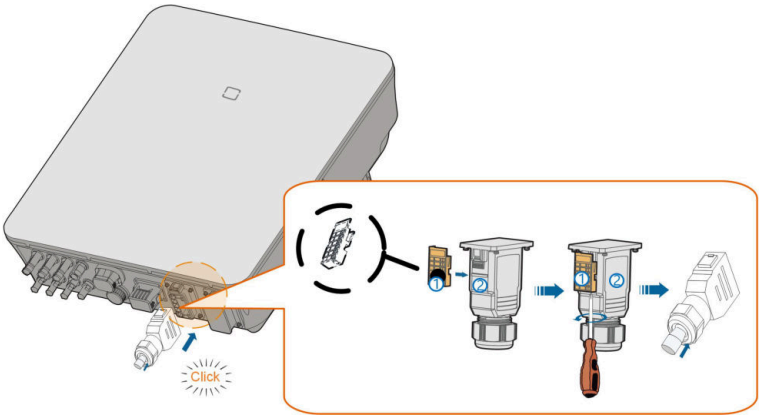

a. Insert block ① into AC connector ② from the side.

b. Tighten the screw on the bottom of block ①.

> The plug and play connector is not completely sealed in design and thus needs to be sealed off on site using appropriate sealing materials such as sealing mastic and rubber plug.

Step 2 Assembling the BACK-UP Connector. Specifically, refer to 6.5.2 Assembling the AC Connector.

> The PE wire of Backup terminal is not required for Australia and New Zealand.

Step 3 Remove the waterproof lid from the **BACK-UP** terminal.

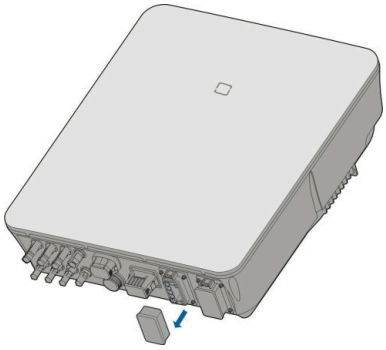

Step 4 Align the Backup connector and the **BACK-UP** terminal and mate them together by hand until a “Click” is heard or felt.

Step 5 Pull all the lines outward to check whether they are firmly installed.

--End

7 Commissioning

7.1 Inspection Before Commissioning

Check the following items before starting the inverter:

- All equipment has been reliably installed.
- DC switch(es) and AC circuit breaker are in the "OFF" position.
- The ground cable is properly and reliably connected.
- The AC cable is properly and reliably connected.
- The DC cable is properly and reliably connected.
- The communication cable is properly and reliably connected.
- The unused terminals are sealed.
- No foreign items, such as tools, are left on the top of the machine or in the junction box (if there is).
- The AC circuit breaker is selected in accordance with the requirements of this manual and local standards.
- All warning signs & labels are intact and legible.

7.2 Commissioning Procedure

Prerequisite

If all of the items mentioned above meet the requirements, proceed as follows to start up the inverter for the first time.

Step 1 Connect the AC circuit breaker.

Step 2 **(Optional)** Connect the external DC circuit breaker between the inverter and the battery pack if a battery is equipped.

Step 3 **(Optional)** Power on the battery pack manually if a battery is equipped.

Step 4 Rotate the DC switch to “ON”. The DC switch may be integrated in the inverter or installed by the customer, wait for at least 5 minutes.

Step 5 If the irradiation and grid conditions meet requirements, the inverter will normally operate. The connection time for inverter to gird may take some minutes or even to more according to different country code chosen in the initial settings and the real site grid condition.

Step 6 Observe the LED indicator to ensure that the inverter operates normally. (Refer to 2.4 LED Indicator).

--End

- Strictly follow the preceding sequence. Otherwise, the product may be damaged, and the loss caused is not covered by the warranty.
- Before closing the AC circuit breaker between the inverter and the power grid, use a multimeter that is set to the AC gear to ensure that the AC voltage is within the specified range. Otherwise, the inverter may be damaged.

7.3 App Preparation

Step 1 Install the iSolarCloud App with latest version. Refer to 8.2 Install iSolarCloud.

Step 2 Register an account. Refer to 8.4 Device Commissioning. If you have got the account and password from the distributor/installer or SUNGROW, skip this step.

Step 3 Download the firmware package to the mobile device in advance. Refer to 8.4 Device Commissioning. This is to avoid download failure due to poor on-site network signal.

--End

7.4 Creating a Plant

Prerequisites:

- The account and password for logging in to iSolarCloud App have been obtained from the distributor/installer or SUNGROW.
- The communication device is normally connected to the inverter.
- System positioning is enabled and iSolarCloud App is allowed to access location information.

Step 1 Open the App, tap **More** in the upper right corner of the interface, and select the correct access address.

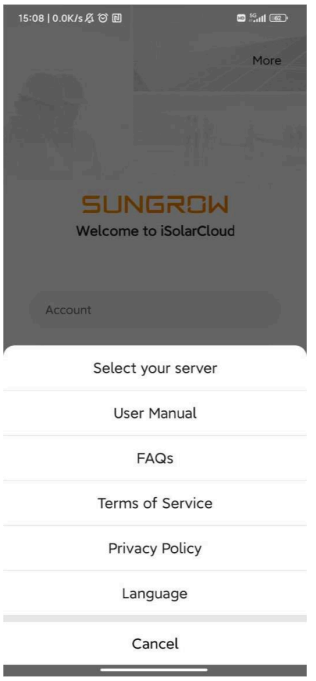

Figure 7-1 Select Access Address

Step 2 Enter the account and password on the login interface, and tap **LOGIN** to log in.

Step 3 Tap ⊕ in the upper right corner to enter the plant creation interface.

Step 4 Fill in the content according to actual needs, and the parameters containing * are required. Tap **Next** to enter the next interface.

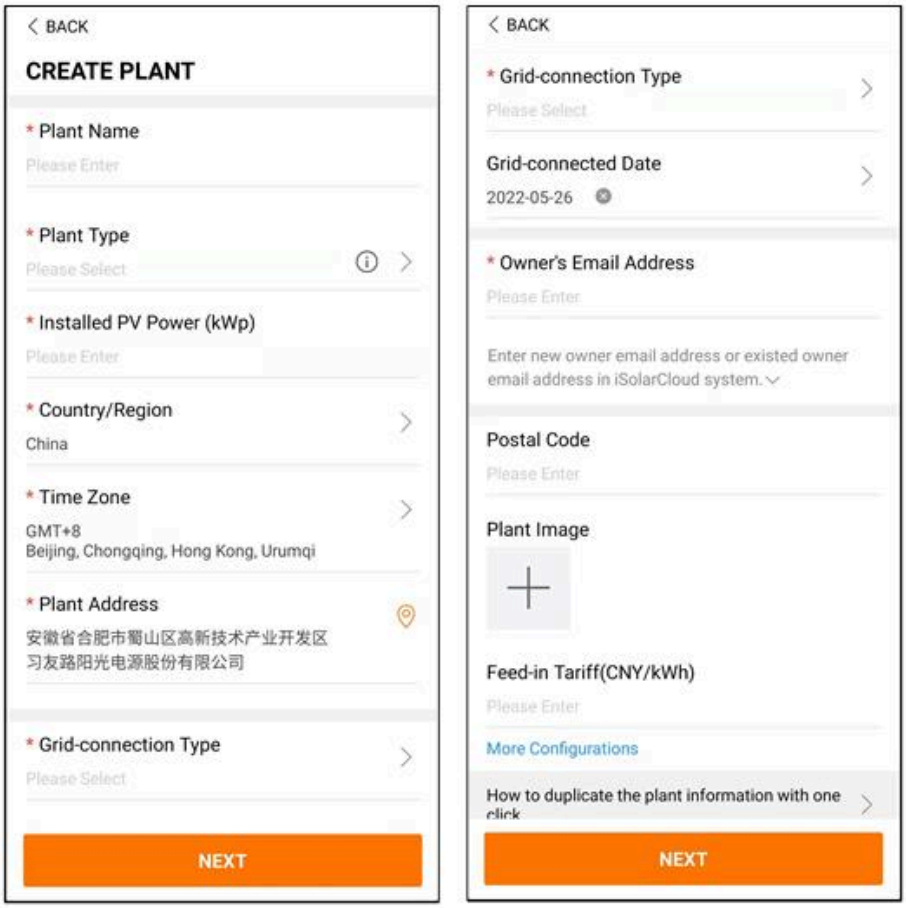

Figure 7-2 Plant Creation Settings

Parameter Name	Description
Plant name	The name of the plant.
Plant type	The type of the plant, which should be set corresponding to the actual plant type.
Installed power	The installed power of the plant.
Country/ Region	The country/region where the plant is located.
Time zone	The time zone where the plant is located, which can be filled through automatic positioning and manual input.

Parameter Name	Description
Plant address	The location of the plant, which can be filled in two ways: • Manually: Manually enter the plant location in the input box. • Automatically: Tap to automatically obtain the current location or search for the location of the plant, and then tap **Confirm**.
Grid-connection type	The way the plant is connected to the grid, including **100% Feed-in**, **Self-Consumption**, **Zero Export***, and **Off-grid**.
Grid-connected date	The time when the plant is connected to the grid.
Owner's email address	Fill in the owner information of the plant, and both registered and unregistered email addresses are supported.
Postal code	The postal code of the place where the plant is located.
Plant image	Take photos of the plant and upload them.
Feed-in tariff	The feed-in tariff can be set in two ways: • Enter the feed-in tariff directly in the input box. • Tap **More Configurations**, select the tariff unit, enter the feed-in tariff, and tap **Confirm**. Enable **Time-of-Use Tariff** if needed. Tap **Add Time-of-Use Tariff**, add time intervals and price, and tap **Confirm**. Please note that if **Time-of-use Tariff** is enabled, the time periods shall cover 24 hours a day, and can not overlap.
Consumption tariff	Set the consumption tariff as follows: • Tap **More Configurations**, select the tariff unit, enter the consumption tariff, and tap **Confirm**. Enable **Time-of-Use Tariff** if needed, and refer to the setting methods of the feed-in tariff.

The SHRT series does not support phase-wise zero-power export. It cannot comply with local grid requirements that prohibit power injection on any individual phase.

Step 5 Bind a device through scanning the QR code on the device, manually inputting the device S/N, or uploading a QR code picture. Tap **Confirm** after the QR code is identified or the S/N is verified.

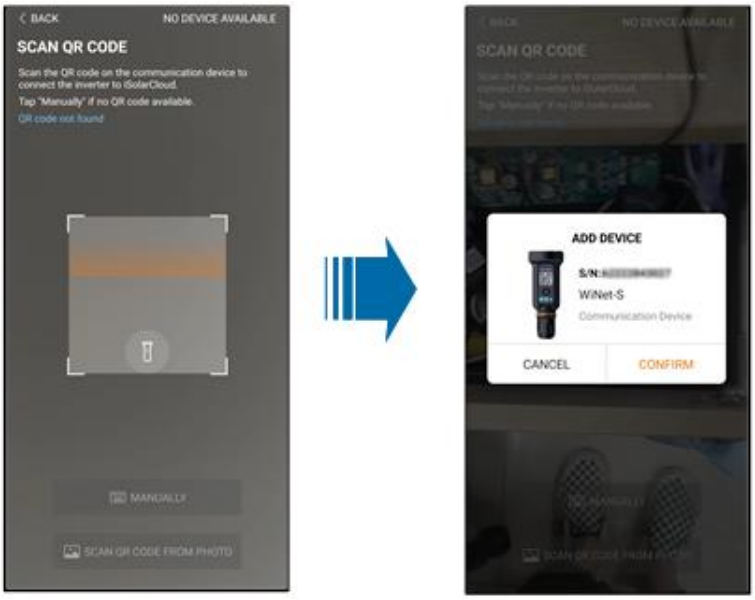

Step 6 After a device is bound, tap **Device** and **Commissioning** to go to corresponding interface.

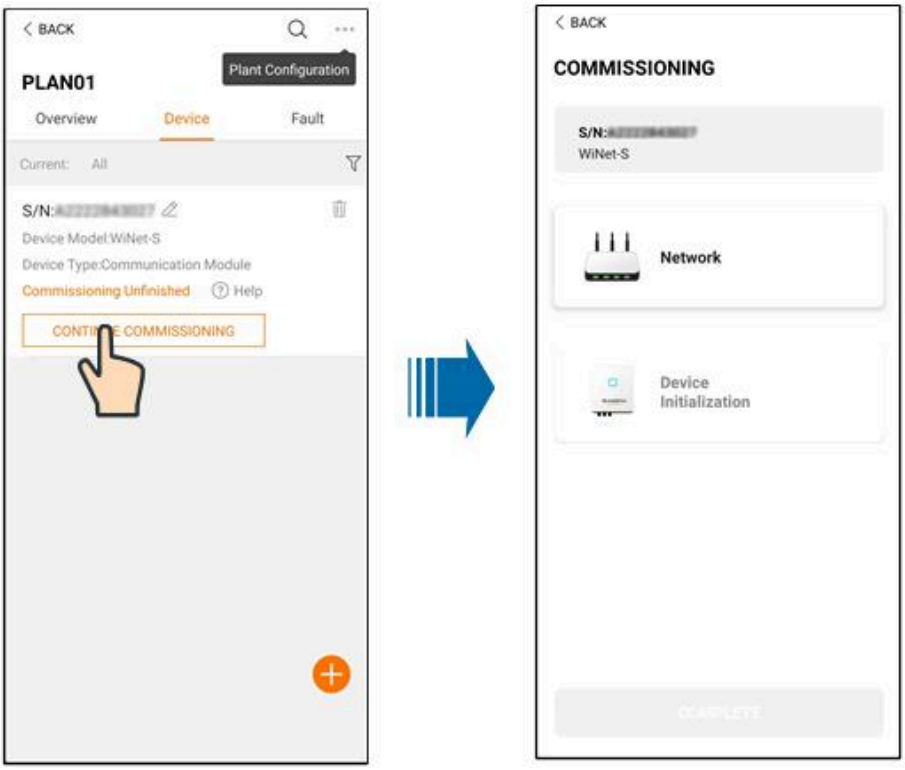

Step 7 Tap **Network Configuration** to go to the **WLAN connection** interface. Tap the home network in the WLAN list, enter the password, and then tap **Confirm**.

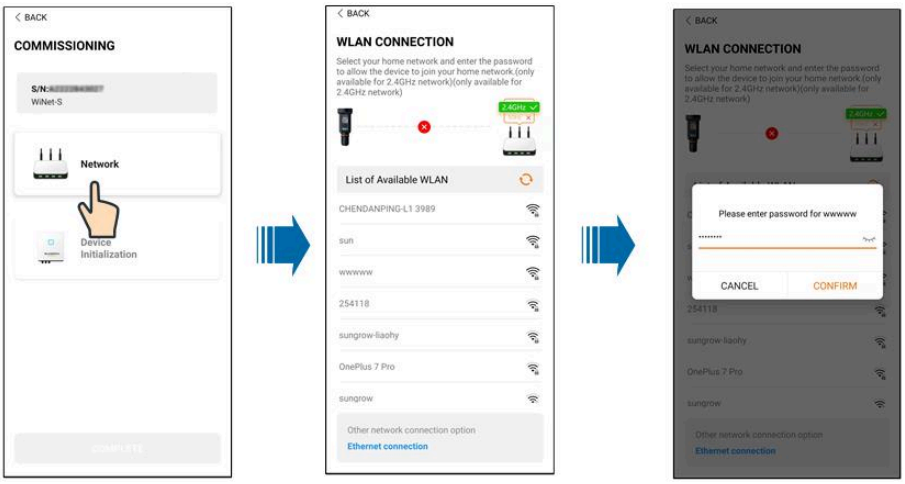

Step 8 Enter the **Activate EasyConnect** interface, and press the multi-function button on the WiNet-S to enable the Easyconnect mode according to the prompt on the screen. The App automatically enters a waiting processing interface if this mode is enabled, and automatically returns to the commissioning interface after the processing is completed.

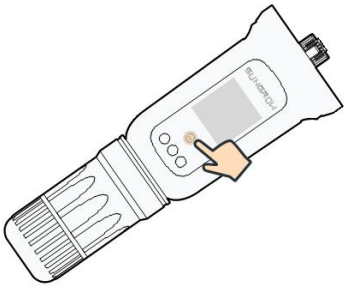

NOTICE

Only the 2.4 GHz working band is supported under the networking mode.
If the Easyconnect fails, please refer to other methods in the WiNet-S manual to establish the connection.

Step 9 Tap **Device Initialization** to go to the **Device initialization** interface. Set the initialization protection parameters as needed and tap **Settings** to return to the commissioning interface.

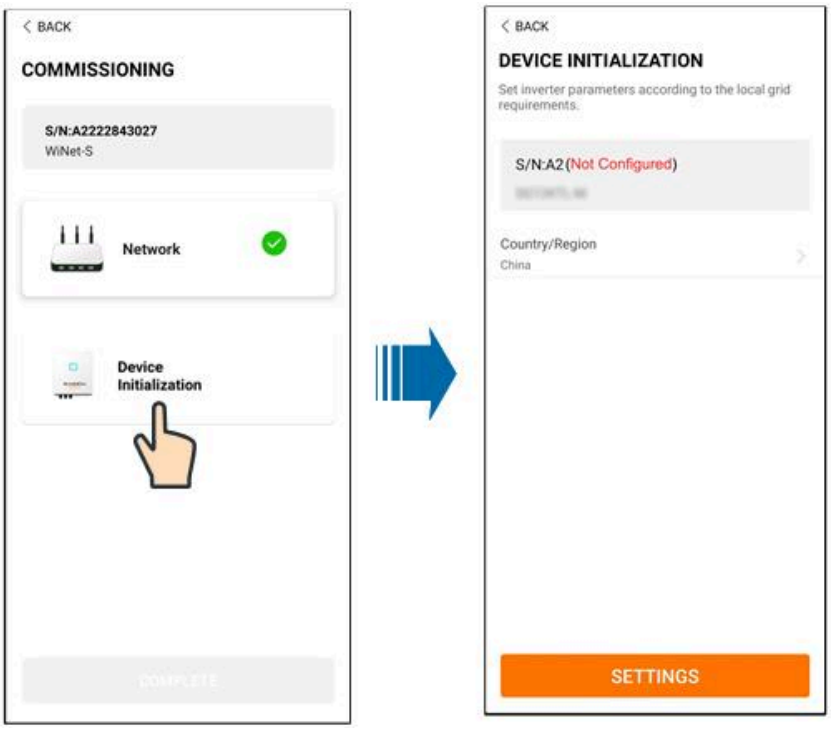

When the country is set to Australia, additionally set the applicable network service provider and then the grid type.

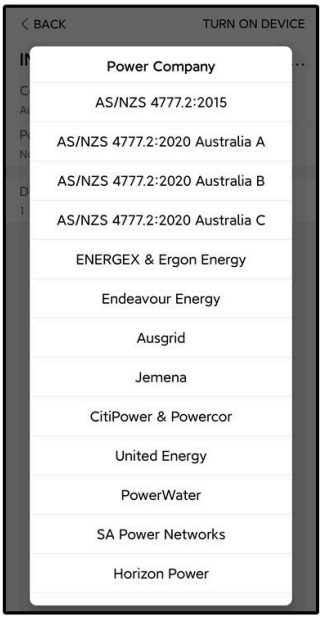

The image shown here is for reference only. Refer to the actual interface for the supported network service providers.

Table 7-1 Description of Network Service Provider and Grid Type

Network Service Provider	Grid Type
AS/NZS 4777.2:2015	/
AS/NZS 4777.2:2020 Australia A	/
AS/NZS 4777.2:2020 Australia B	/
AS/NZS 4777.2:2020 Australia C	/
ENERGEX & Ergon Energy	• STNW1170: single-phase < 10 kVA & three-phase < 30 kVA • STNW1174: 30 kVA < P_n ≤ 1500 kVA
Jemena	• ≤ 10 kVA per phase (or 30 kVA per three phase) • ELE GU 0014: 30 kVA–200 kVA
Endeavour Energy	MDI 0043
Ausgrid	NS194
CitiPower & Powercor	• ≤ 5 kVA for single-phase & 30 kVA for three-phase • > 30 kVA three-phase
United Energy	• UE-ST-2008.1: ≤ 10 kVA for single-phase & 30 kVA for three-phase • UE-ST-2008.2: > 30 kVA three-phase
PowerWater	Embedded Generation Notice Photovoltaic Systems:2020
SA Power Networks	• TS129-2019: < 10 kW for single-phase & 30 kW for three-phase • TS130-2017: > 30 kW & ≤ 200 kW • TS131-2018: > 200 kW
Horizon Power	• HPC-9DJ-13-0001-2019: ≤ 10kVA for single-phase & 30 kVA for three-phase • HPC-9DJ-13-0002-2019: > 30kVA & ≤1MVA

Network Service Provider	Grid Type
westernpower	EDM#33612889-2019
AusNet Services	Basic Micro Embedded Generation: 2020

* For compliance with AS/NZS 4777.2:2020, please select from Australia A/B/C. Please contact your electricity grid operator for which region to use.

- Please check the country supported by this product at http://support.sungrowpower.com/.
- Set **Country/Region** to the country/region where the inverter is installed. Otherwise, the inverter may report a fault.

Step 10 After a plant is successfully created, return to the App home page to view the plant information.

--End

8 iSolarCloud App

8.1 About iSolarCloud

The iSolarCloud App is a mobile application used for power plant management. The App provides plant operation analysis service and enables intelligent mobile O&M. It is designed with functions such as plant operation data display, rapid plant access, parameter setting, quick fault location and notification, and power yield and revenue analysis. With iSolarCloud, convenient and efficient end-to-end plant O&M is allowed.

Connection Methods

Users can log in to the App via remote connection or local access for plant monitoring.

Login by Establishing a Direct Connection (Local)

Establish communication between the mobile phone and the WiFi wireless communication module or the inverter's built-in Bluetooth module to enable mobile maintenance of the inverter. After logging into the App, users can check the information about and set parameters for the inverter.

Direct Login (Local)

> Login via Bluetooth connection is applicable only for SUNGROW inverters with built-in Bluetooth modules. Please consult your retailer/installer about whether the inverter is equipped with a Bluetooth module.

Login with an Account (Remote)

Establish communication between the communication module and the home router or base station to enable data exchange between the inverter and the cloud server. After logging

into the App, users can check the inverter data or send commands to control the inverter on the App.

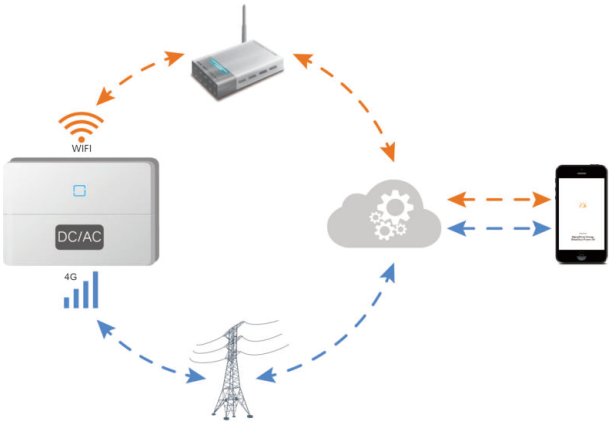

Login Via Account and Password (Remote)

8.2 Install iSolarCloud

Prerequisite

This section introduces how to download and install the iSolarCloud App.

Procedure

Step 1 Search for **iSolarCloud** in App Store, Google Play or other App stores, or scan the QR code below with a mobile phone and download the App by following the onscreen instructions.

Step 2 Tap the downloaded installation package and follow the onscreen instructions to complete the installation. The icon of iSolarCloud will then appear on the screen.

--End

8.3 User Roles

After logging into the iSolarCloud App with different roles, users will have varying levels of access to device operations. The default accounts and passwords corresponding to different user roles can be found in **iSolarCloud App User Manual** **Device Commissioning (V2.1.6.20250218or Later) > Device Connection > Device Connection via WLAN > Identity Verification**.

For account security purposes, please refer to the **Identity Verification** section to change your password promptly after logging into the iSolarCloud App.

8.4 Device Commissioning

For device commissioning operations, please refer to the **Device Commissioning** in the **iSolarCloud App User Manual**. Alternatively, you can scan the QR code below to access the **Device Commissioning** section of the manual.

9 System Decommissioning

9.1 Decommissioning the Inverter

9.1.1 Disconnecting the Inverter

Prerequisite

> **⚠ CAUTION**
>
> **Danger of burns!**
> **Even if the inverter is shut down, it may still be hot and cause burns. Wear protective gloves before operating the inverter after it cools down.**

For maintenance or other service work, the inverter must be switched off. Proceed as follows to disconnect the inverter. Lethal voltages or damage to the inverter will follow if otherwise.

Step 1 Stop the inverter via the iSolarCloud App.

Step 2 Disconnect the external AC circuit breaker and prevent it from inadvertent reconnection.

Step 3 Rotate the DC switch to the "OFF" position for disconnecting all of the PV string inputs.

Step 4

Step 5 Disconnect the DC circuit breaker between the battery and the inverter.

> **NOTICE**
>
> **Do not power on the system again for 1 minute after the disconnection.**

Step 6 Wait about 10 minutes until the capacitors inside the inverter completely discharge.

Step 7 Ensure that the DC cable is current-free with a current clamp.

--End

9.1.2 Dismantling the Inverter

Prerequisite

> **⚠ CAUTION**
>
> **Risk of burn injuries and electric shock!**
> **After the inverter is powered off for 10 minutes, measure the voltage and current with professional instrument. Only when there is no voltage nor current can operators who wear protective equipment operate and maintain the inverter.**

Before dismantling the inverter, disconnect both AC and DC connections.
If there are more than two layers of inverter DC terminals, dismantle the outer DC connectors before dismantling the inner ones.
If the original packing materials are available, put the inverter inside them and then seal them using adhesive tape. If the original packing materials are not available, put the inverter inside a cardboard box suitable for the weight and size of this inverter and seal it properly.

Step 1 Refer to 6 Electrical Connection for the inverter disconnection of all cables in reverse steps.

Step 2 Dismantle the inverter referring to 5 Mechanical Mounting in reverse steps.

Step 3 If necessary, remove the wall-mounting bracket from the wall.

Step 4 If the inverter will be reinstalled in the future, please refer to 4.3 Inverter Storage for a proper conservation.

--End

9.1.3 Disposal of Inverter

Users take the responsibility for the disposal of the inverter.

⚠ WARNING

Please scrap the inverter in accordance with relevant local regulations and standards to avoid property losses or casualties.

NOTICE

Some parts of the inverter may cause environmental pollution. Please dispose of them in accordance with the disposal regulations for electronic waste applicable at the installation site.

9.2 Decommissioning the Battery

Prerequisite

Decommission the battery in the system after the inverter is decommissioned. Proceed as follows to decommission a Li-ion battery.

Step 1 Disconnect the DC circuit breaker between the battery and the inverter.

Step 2 Disconnect the communication cable between the battery and the inverter.

Step 3 Wait for about 1 minute and then use the multimeter to measure the port voltage of the battery.

Step 4 If the battery port voltage is zero, disconnect the power cables from the battery module.

--End

For disposal of this product, please call the phone number listed in the warranty booklet provided at the time of purchase.

10 Troubleshooting and Maintenance

10.1 Troubleshooting

Please refer to the charger user manual for the fault code of the charger.

When an alarm occurs, the alarm information can be viewed through the App.

Alarm ID and corrective measures are as follows:

Alarm ID	Alarm Name	Corrective Measures
002, 003, 014, 015	Grid Overvoltage	Generally, the inverter will be reconnected to the grid after the grid returns to normal. If the fault occurs repeatedly: 1. Measure the actual grid voltage, and contact the local electric power company for solutions if the grid voltage is higher than the set value. 2. Check whether the protection parameters are appropriately set via the App or the LCD. Modify the overvoltage protection values with the consent of the local electric power operator. 3. If the fault still exists, contact SUNGROW.
004, 005	Grid Undervoltage	Generally, the inverter will be reconnected to the grid after the grid recovers. If the alarm occurs frequently: 1. Measure the grid voltage, and contact the local utility grid company for solutions if the grid voltage is below the specified value. 2. Check, through the App, whether the protection parameters are appropriately set. 3. Check whether the AC cable is firmly in place. 4. If the alarm persists, contact SUNGROW.
008	Grid Overfrequency	Generally, the inverter will be reconnected to the grid after the grid recovers. If the alarm occurs frequently: 1. Measure the grid frequency, and contact the local utility grid company for solutions if the grid frequency is beyond the specified range.
009	Grid Underfrequency	

Alarm ID	Alarm Name	Corrective Measures
		2. Check, through the App, whether the protection parameters are appropriately set. 3. If the alarm persists, contact SUNGROW.
010	Grid Power Outage	Generally, the inverter will be reconnected to the grid after the grid recovers. If the alarm occurs frequently: 1. Check whether the grid supplies power reliably. 2. Check whether the AC cable is firmly in place. 3. Check whether the AC cable is correctly connected (whether the live wire and the N wire are in correct place). 4. Check whether the AC switch or circuit breaker is disconnected. 5. If the alarm persists, contact SUNGROW.
012	Excessive Leakage Current	1. The alarm can be caused by poor sunlight or damp environment, and the inverter will be reconnected to the grid after the environment is improved. 2. If the environment is normal, check whether the AC and DC cables are well insulated. 3. If the alarm persists, contact SUNGROW.
013	Grid Abnormal	Generally, the inverter will be reconnected to the grid after the grid recovers. If the alarm occurs frequently: 1. Measure the grid frequency, and contact the local utility grid company for solutions if the grid frequency exceeds the specified value. 2. If the alarm persists, contact SUNGROW.
017	Grid Voltage Unbalance	Generally, the inverter will be reconnected to the grid after the grid returns to normal. If the fault occurs repeatedly: 1. Measure the actual grid voltage. If grid phase voltages differ greatly, contact the electric power company for solutions. 2. If the voltage difference between phases is within the permissible range of the local power company, modify the grid voltage imbalance parameter through the App. 3. If the fault still exists, contact SUNGROW.

Alarm ID	Alarm Name	Corrective Measures
028, 029	PV Reverse Connection Fault	1. Check whether the corresponding string is of reverse polarity. If so, disconnect the DC switch and adjust the polarity when the string current drops below 0.5 A. 2. If the fault still exists, contact SUNGROW. *The code 28 to code 29 are corresponding to PV1 to PV2 respectively.
037	High Ambient Temperature	Generally, the inverter will resume operation when the internal or module temperature returns to normal. If the fault persists: 1. Check whether the ambient temperature of the inverter is too high; 2. Check whether the inverter is in a well-ventilated place; 3. Check whether the inverter is exposed to direct sunlight. Shield it if so; 4. Check whether the fan is running properly. Replace the fan if not; 5. If the fault still exists, contact SUNGROW.
039	Low System Insulation Resistance	Wait for the inverter to return to normal. If the fault occurs repeatedly: 1. Check whether the ISO resistance protection value is excessively high via the app, and ensure that it complies with the local regulations. 2. Check the resistance to ground of the string and DC cable. Take corrective measures in case of short circuit or damaged insulation layer. 3. If the cable is normal and the fault occurs on rainy days, check it again when the weather turns fine. 4. If there are batteries, check whether battery cables are damaged and whether terminals are loose or in poor contact. If so, replace the damaged cable and secure terminals to ensure a reliable connection. 5. If the fault still exists, contact SUNGROW.
106	Grounding Cable Fault	1. Check whether the AC cable is correctly connected. 2. Check whether the insulation between the ground cable and the live wire is normal. 3. If the fault still exists, contact SUNGROW.

Alarm ID	Alarm Name	Corrective Measures
051	Off-grid Load Overpower	1. Reduce the power of loads connected at the off-grid port, or remove some loads. 2. If the alarm persists, contact SUNGROW.
714	BMS Communication Fault	1. Check whether the communication cable and the terminals are abnormal. If so, correct them to ensure reliable connection. 2. Reconnect the communication cable of the meter. 3. If the fault still exists, contact SUNGROW.
932–935, 937, 939	Battery Alarm	Generally, the battery can automatically recover. In case the alarm persist for a long time: 1. If the alarm is caused by ambient temperature, such as over temperature alarm or low temperature alarm, take measures to change the ambient temperature, such as improving heat dissipation conditions. 2. If the fault persists, contact battery manufacturer.
703, 711, 712, 715, 732–736, 739, 832–833, 835–837	Battery Abnormal	1. In case of abnormal battery voltage, check whether the battery power cable connection is abnormal (reverse connection, loose, etc.). If so, connect the battery power cable correctly. 2. Check whether the battery real-time voltage is abnormal if the battery power cable is correctly connected. If so, contact the battery manufacturer. If not,contact SUNGROW. 3. In case of abnormal battery temperature, take measures to change the ambient temperature, such as improving heat dissipation conditions. 4. If the fault persists, contact battery manufacturer.
502-504, 507, 508, 510, 513, 516–518, 994, 996	System Alarm	1. The inverter can continue running. 2. Check whether the related wiring and terminal are abnormal, check whether there are any foreign materials or other environmental abnormalities, and take corresponding corrective measures when necessary. 3. If the alarm persists, please contact SUNGROW.
514	Meter Communication	1. Check whether the communication cable and the terminals are abnormal. If so, correct them to ensure reliable connection.

Alarm ID	Alarm Name	Corrective Measures
	Abnormal Alarm	2. Reconnect the communication cable of the meter. 3. If the alarm still exists, contact SUNGROW.
006, 007, 011, 019, 021, 025, 038, 040–042, 048–050, 052–054, 056, 064–067, 100–102, 105, 107, 113, 117, 200–205, 300, 303–305, 308–316, 320, 600, 601, 605, 608, 612, 616, 620, 624, 995	System Fault	1. Wait for the inverter to return to normal. 2. Disconnect the AC and DC switches, and disconnect the battery side switches if there are batteries. Close the AC and DC switches in turn 15 minutes later and restart the system. 3. If the fault still exists, contact SUNGROW.

Contact the installer if the measures listed in the “Troubleshooting Method” column have been taken but the problem persists. Contact SUNGROW if the installer fails to solve the problem.

10.2 Maintenance

10.2.1 Maintenance Notices

The DC switch can be secured with a lock in the OFF position or a certain angle beyond the OFF position.(For countries “AU” and “NZ”)

⚠ DANGER

Risk of inverter damage or personal injury due to incorrect service!

- **Be sure to use special insulation tools when perform high-voltage operations.**
- **Before any service work, first disconnect the grid-side AC circuit breaker and check the inverter status. If the inverter indicator is off, please wait until night to disconnect the DC switch. If the inverter indicator is on, directly disconnect the DC switch.**
- **After the inverter is powered off for 10 minutes, measure the voltage and current with professional instrument. Only when there is no voltage nor current can operators who wear protective equipment operate and maintain the inverter**
- **Even if the inverter is shut down, it may still be hot and cause burns. Wear protective gloves before operating the inverter after it cools down.**
- **When maintaining the product, it is strictly prohibited to open the product if there is an odor or smoke or if the product appearance is abnormal. If there is no odor, smoke, or obvious abnormal appearance, repair or restart the inverter according to the alarm corrective measures. Avoid standing directly in front of the inverter during maintenance.**

⚠ CAUTION

To prevent misuse or accidents caused by unrelated personnel: Post prominent warning signs or demarcate safety warning areas around the inverter to prevent accidents caused by misuse.

NOTICE

Restart the inverter only after removing the fault that impairs safety performance.
As the inverter contains no component parts that can be maintained, never open the enclosure, or replace any internal components.
To avoid the risk of electric shock, do not perform any other maintenance operations beyond those described in this manual. If necessary, contact your distributor first. If the problem persists, contact SUNGROW. Otherwise, the losses caused is not covered by the warranty.

NOTICE

Touching the PCB or other static sensitive components may cause damage to the device.

- **Do not touch the circuit board unnecessarily.**
- **Observe the regulations to protect against electrostatic and wear an anti-static wrist strap.**

10.2.2 Routine Maintenance

Item	Method	Period
General status of the system	• Visual check for any damage or deformation of the device. • Check any abnormal noise during the operation. • Check each operation parameter. • Be sure that nothing covers the heat sink of the device.	Every 6 months
Electrical connection	Check whether there is damage to the cables, especially the surface in contact with metal.	6 months after commissioning and then once or twice a year

10.2.3 Replacing the Button Cell

⚠ DANGER

Disconnect the inverter from the grid first, then the PV strings and the battery before any maintenance work.
Lethal voltage still exists in the inverter. Please wait at least 10 minutes and then perform maintenance work.

There is a button cell on the inner PCB board. Contact SUNGROW for replacement when the relevant fault alarm occurs.

Check the fastener, appearance, voltage, and resistance quarterly and annually.

10.2.4 Digital Signature Description

Starting from software versions SAPPHIRE-H_03011.95.08-BY-2025.5.9, SAPPHIRE-H_01011.95.08-BY-2025.5.9, SAPPHIRE-H_B001.V000.P016-20250509, and later, a digital signature has been added for upgrade verification. The upgrade can proceed only if the verification is successful.

11 Appendix

11.1 Technical Data

Parameters	SH5.0RT	SH6.0RT
	PV Input	
Recommended max. PV input power	7500 W	9000 W
Max. PV input voltage[1]	1000 V	1000 V
Startup voltage	180 V	250 V
Rated input voltage	600 V	600 V
MPPT operating voltage range	150 V - 950 V	200 V - 950 V
MPP voltage range for rated power[2]	210 V - 850 V	250 V - 850 V
No. of independent MPP trackers	2	
No. of PV strings per MPPT	1 / 1	
Max. PV input current	25 A (12.5 A / 12.5 A)	
Max. current for input connector	30 A	
Max. DC short-circuit current	32 A (16 A / 16 A) for other countries 36 A (18 A / 18 A) for Australia	
	Battery Data	
Battery type	Li-ion battery	
Battery voltage	150 V - 600 V	
Max. charge / discharge current[3]	30 A / 30 A	

Parameters	SH5.0RT	SH6.0RT
Max. charge / discharge power	7500 W / 6000 W	9000 W / 7200 W
Input / Output (AC)		
Max. AC input power from grid	12500 W	15000 W
Rated AC output power	5000 W	6000 W
Max. AC output apparent power	5000 VA	6000 VA
Max. AC output current	7.6 A	9.1 A
Rated AC output current[7]	7.3A	8.7A
Rated AC voltage	3 / N / PE, 220 / 380 V; 230 / 400 V; 240 / 415 V	
AC voltage range	270 - 480 Vac	
Rated grid frequency/Grid frequency range	50Hz / 45 - 55Hz	
THD	< 3 % (of rated power)	
DC current injection	< 0.5 % In	
Power factor	> 0.99 / 0.8 leading to 0.8 lagging	
Feed-in phases / Connection phases	3 / 3	
Backup Data (on grid mode)		
Max. output power for backup load	16500W	
Max. output current for backup load	3*25A	
Backup Data (off- grid mode)		
Rated voltage	3 / N / PE, 220 Vac / 230 Vac / 240 Vac	
Rated backup output current[7]	7.3A	8.7A
Rated frequency	50 Hz	

Parameters	SH5.0RT	SH6.0RT
THDV(@Linear load)	2%	
Backup switch time	< 20 ms	
Rated output power	5000 W / 5000 VA	6000 W / 6000 VA
Peak output power [4]	6000 W / 6000 VA□ 5min 10000 W / 10000 VA□ 10 s	7200 W / 7200 VA,5min 10000 W / 10000 VA,10 s
Peak output power on single phase [5]	2000 VA (≥9.6kWh)	2200 VA (≥12.8kWh)
Rated output current for backup load	3 x 18.5 A	
Efficiency		
Max. efficiency / European efficiency	98% / 97.2%	98.2% / 97.5%
Protection&Function		
Grid monitoring	Yes	
DC reverse polarity protection	Yes	
AC short circuit protection	Yes	
Leakage current protection	Yes	
DC switch (solar)	Yes	
DC Overcurrent Protection (Battery)	Yes	
Over-voltage category	III [Mains], II [PV] [Battery]	
Surge Protection	DC Type II / AC Type II	
Battery input reverse polarity protection	Yes	
Parallel operation on grid port / Max. No. of inverters	Master-slave mode / 2 ****** (need same inverters model)	
Protective Class	I	

Parameters	SH5.0RT	SH6.0RT
Overvoltage Category	DC II/AC III	
Active Anti-Islanding Method	Frequency Shift	
General Data		
Topology (solar / battery)	Transformerless / Transformerless	
Degree of protection	IP65	
Operating ambient temperature range	-25 ℃ - 60 ℃	
Allowable relative humidity range (Non-condensing)	0 - 100 %	
Cooling method	Natural convection	
Max. operating altitude	4000 m (> 3000 m derating)	
Noise (Typical)	30 dB(A)	
Display	LED	
Communication	RS485, WLAN, Ethernet, CAN, 4 × DI, 1 × DO	
DC connection type	MC4 (PV, Max.6mm²) / Evo2 Compatible (Battery, Max.6mm²)	
AC connection type	Plug and play connector (Grid Max.10mm², Backup Max.6mm²)	
Country of manufacture	China	
Dimensions (W x H x D)	460 mm x 540 mm x 170 mm	
Mounting method	Wall-mounting bracket	
Weight	27 kg	

1. Input voltage exceeding the MPPT operating voltage range triggers inverter protection.

2. The output voltage of strings should all exceed the lower limit of the full load MPPT voltage range.

3. Depending on the connected battery. The maximum charging/discharging current is 20A when used with the SBR064 battery system.

4. Can be reached only if PV and battery power is sufficient.Detail compatibility for backup under off-grid scenario can be referred to the user manual.

5. Peak power only for Resistive loads. Detail refer to SHRT backup output power document.

6. Germany is available for 2 inverters parallel in maximum if no ripple control is used in system.

7. These values are only applicable in Australia.

Parameters	SH8.0RT	SH10RT
PV Input		
Recommended max. PV input power	12000 W	15000 W
Max. PV input voltage[1]	1000 V	
Startup voltage	250 V	
Rated input voltage	600 V	
MPPT operating voltage range	200 V - 950 V	
MPP voltage range for rated power[2]	330 V - 850 V	280 V - 850 V
No. of independent MPP trackers	2	
No. of PV strings per MPPT	1 / 1	1 / 2
Max. PV input current	25 A (12.5 A / 12.5 A)	37.5 A (12.5 A / 25 A)
Max. current for input connector	30 A	
Max. DC short-circuit current	32 A (16 A / 16 A) for other countries 36 A (18 A / 18 A) for Australia	48 A (16 A / 32 A)for other countries 54 A (18 A / 36 A) for Australia
Battery Data		
Battery type	Li-ion battery	
Battery voltage	150 V - 600 V	

Parameters	SH8.0RT	SH10RT
Max. charge / discharge current[3]	30 A / 30 A	
Max. charge / discharge power	10600 W / 10600 W	
Input / Output (AC)		
Max. AC power from grid	18600 W	20600 W
Rated AC output power	8000 W	10000 W 9999 W for Australia
Max. AC output apparent power	8000 VA	10000 VA 9999VA for Australia
Max. AC output current	12.1 A	15.2 A
Rated AC output current[7]	11.6A	14.5A
Rated AC voltage	3 / N / PE, 220 / 380 V; 230 / 400 V; 240 / 415 V	
AC voltage range	270 - 480 Vac	
Rated grid frequency/Grid frequency range	50Hz / 45 - 55Hz	
THD	< 3 % (of rated power)	
DC current injection	< 0.5 % In	
Power factor	> 0.99 / 0.8 leading to 0.8 lagging	
Feed-in phases / Connection phases	3 / 3	
Backup Data (on grid mode)		
Max. output power for backup load	16500W	
Max. output current for backup load	3*25A	
Backup Data (off- grid mode)		
Rated voltage	3 / N / PE, 220 Vac / 230 Vac / 240 Vac	

Parameters	SH8.0RT	SH10RT
Rated backup output current[7]	11.6A	14.5A
Rated frequency	50 Hz	
THDV(@Linear load)	2%	
Backup switch time	< 20 ms	
Rated output power	8000 W / 8000 VA	10000 W / 10000 VA 9999 W / 9999 VA for Australia
Peak output power [4]	12000 W / 12000 VA,5min	
Peak output power on single phase [5]	2700 VA (≥12.8kWh)	3400 VA (≥12.8kWh)
Rated output current for backup load	3 x 18.5 A	
Efficiency		
Max. efficiency / European efficiency	98.4% / 97.9%	98.4% / 97.9%
Protection&Function		
Grid monitoring	Yes	
DC reverse polarity protection	Yes	
AC short-circuit protection	Yes	
Leakage current protection	Yes	
DC switch (solar)	Yes	
DC Overcurrent Protection (battery)	Yes	
Over-voltage category	III [Mains], II [PV] [Battery]	
Surge Protection	DC Type II / AC Type II	
Protective Class	Yes	

Parameters	SH8.0RT	SH10RT
Parallel operation on grid port / Max. No. of inverters	Master-slave mode / 2 [6] (need same inverters model)	
Protective Class	I	
Overvoltage Category	DC II/AC III	
Active Anti-Islanding Method	Frequency Shift	
General Data		
Isolation method (solar / battery)	Transformerless / Transformerless	
Degree of protection	IP65	
Operating ambient temperature range	-25 ℃ - 60 ℃	
Allowable relative humidity range (non-condensing)	0 - 100 %	
Cooling method	Natural convection	
Max. operating altitude	4000 m (> 3000 m derating)	
Noise (Typical)	30 dB(A)	
Display	LED	
Communication	RS485, WLAN, Ethernet, CAN, 4 × DI, 1 × DO	
DC connection type	MC4 (PV, Max.6mm²) / Evo2 Compatible (Battery, Max.6mm²)	
AC connection type	Plug and play connector (Grid Max.10mm², Backup Max.6mm²)	
Country of manufacture	China	
Dimensions (W x H x D)	460 mm x 540 mm x 170 mm	
Mounting method	Wall-mounting bracket	
Weight	27 kg	

1.Input voltage exceeding the MPPT operating voltage range triggers inverter protection.

2. The output voltage of strings should all exceed the lower limit of the full load MPPT voltage range.

3. Depending on the connected battery. The maximum charging/discharging current is 20A when used with the SBR064 battery system.

4. Can be reached only if PV and battery power is sufficient.

5. Peak power only for Resistive loads. Detail refer to SHRT backup output power document.

6. Germany is available for 2 inverters parallel in maximum if no ripple control is used in system.

7. These values are only applicable in Australia.

Parameters	SH5.0RT-20	SH6.0RT-20
	PV Input	
Recommended max. PV input power	7500 W	9000 W
Max. PV input voltage[1]	1000 V	1000 V
Min. PV input voltage / Startup voltage	150 V / 180 V	200 V / 250 V
Rated input voltage	600 V	600 V
MPPT operating voltage range	150 V - 950 V	200 V - 950 V
MPP voltage range for rated power[2]	210 V - 850 V	250 V - 850 V
No. of independent MPP trackers	2	
No. of PV strings per MPPT	1 / 1	
Max. PV input current	27 A (13.5 A / 13.5 A)	
Max. current for input connector	30 A	
Max. DC short-circuit current	36 A (18 A / 18 A)	
	Battery Data	

Parameters	SH5.0RT-20	SH6.0RT-20
Battery type	Lithium battery	
Battery voltage	150 V - 600 V	
Max. charge / discharge current[3]	30 A / 30 A	
Max. charge / discharge power	7500 W / 6000 W	9000 W / 7200 W
Input / Output (AC)		
Max. AC input power from grid	12500 W	15000 W
Rated AC output power	5000 W	6000 W
Max. AC output apparent power	5000 VA	6000 VA
Max. AC output current	7.6 A	9.1 A
Rated AC output current[7]	7.3A	8.7A
Rated AC voltage	3 / N / PE, 220 / 380 V; 230 / 400 V; 240 / 415 V	
AC voltage range	270 - 480 Vac	
Rated grid frequency	50Hz	
Grid frequency range	45 – 55Hz	
Harmonic THD	< 3 % (of rated power)	
DC current injection	< 0.5 % In	
Power factor at Rated power / Adjustable power factor	> 0.99 / 0.8 leading to 0.8 lagging	
Feed-in phases/connection phases	3 / 3	
Backup Data (on grid mode)		
Max. output power for backup load	16500W	
Max. output current for backup load	3*25A	

Parameters	SH5.0RT-20	SH6.0RT-20
Backup Data (off- grid mode)		
Rated voltage	3 / N / PE, 220 Vac / 230 Vac / 240 Vac	
Rated backup output current[7]	7.3A	8.7A
Rated frequency	50 Hz	
THDV(@Linear load)	2%	
Backup switch time	< 20 ms	
Rated output power	5000 W / 5000 VA	6000 W / 6000 VA
Peak output power [4]	6000 W / 6000 VA□ 5min 10000 W / 10000 VA□ 10 s	7200 W / 7200 VA,5min 10000 W / 10000 VA,10 s
Peak output power on single phase[5]	2000 VA (≥9.6kWh)	2200 VA (≥12.8kWh)
Rated output current for backup load during on grid mode	3 x 18.5 A	
Efficiency		
Max. efficiency / European efficiency	98% / 97.2%	98.2% / 97.5%
Protection&Function		
Grid monitoring	Yes	
DC reverse polarity protection	Yes	
AC short-circuit protection	Yes	
Leakage current protection	Yes	
DC switch (solar)	Yes	
DC Overcurrent Protection (Battery)	Yes	

Parameters	SH5.0RT-20	SH6.0RT-20
Surge Protection	DC Type II / AC Type II	
Parallel operation on grid port / Max. No. of inverters	Master-slave mode / 2 [6]	
Battery input reverse polarity protection	Yes	
Protective Class	I	
Overvoltage Category	DC II/AC III	
Active Anti-Islanding Method	Frequency Shift	
General Data		
Topology (solar / battery)	Transformerless / Transformerless	
Degree of protection	IP65	
Operating ambient temperature range	-25 ℃ - 60 ℃	
Allowable relative humidity range (Non-condensing)	0 - 100 %	
Cooling method	Natural convection	
Max. operating altitude	4000 m	
Noise (Typical)	30 dB(A)	
Display	LED	
Communication	RS485, WLAN, Ethernet, CAN, 4 × DI, 1 × DO	
DC connection type	MC4 (PV, Max.6mm²) / Evo2 Compatible (Battery, Max.6mm²)	
AC connection type	Plug and play connector (Grid Max.10mm², Backup Max.6mm²)	
Country of manufacture	China	
Dimensions (W x H x D)	460 mm x 540 mm x 170 mm	
Mounting method	Wall-mounting bracket	
Weight	27 kg	

1.Input voltage exceeding the MPPT operating voltage range triggers inverter protection.

2. The output voltage of strings should all exceed the lower limit of the full load MPPT voltage range.

3. Depending on the connected battery. The maximum charging/discharging current is 20A when used with the SBR064 battery system.

4. Can be reached only if PV and battery power is sufficient.

5. Peak power only for Resistive loads. Detail refer to SHRT backup output power document.

6. Germany is available for 2 inverters parallel in maximum if no ripple control is used in system.

7. These values are only applicable in Australia.

Parameters	SH8.0RT-20	SH10RT-20
	PV Input	
Recommended max. PV input power	12000 W	15000 W
Max. PV input voltage[1]	1000 V	1000 V
Min. PV input voltage / Startup voltage	200 V / 250 V	200 V / 250 V
Rated input voltage	600 V	600 V
MPPT operating voltage range	200 V - 950 V	200 V - 950 V
MPP voltage range for rated power[2]	330 V - 850 V	280 V - 850 V
No. of independent MPP trackers	2	
No. of PV strings per MPPT	1 / 1	1 / 2
Max. PV input current	27 A (13.5 A / 13.5 A)	40.5 A (13.5 A / 27 A)
Max. current for input connector	30 A	
Max. DC short-circuit current	36 A (18 A / 18 A)	54 A (18 A / 36 A)

Parameters	SH8.0RT-20	SH10RT-20
Battery Data		
Battery type	Lithium battery	
Battery voltage	150 V - 600 V	
Max. charge / discharge current[3]	30 A / 30 A	
Max. charge / discharge power	10600 W / 10600 W	10600 W / 10600 W
Input / Output (AC)		
Max. AC input power from grid	18600 W	20600 W
Rated AC output power	8000 W	10000 W 9999W for Australia
Max. AC output apparent power	8000 VA	10000 VA 9999W for Australia
Max. AC output current	12.1 A	15.2 A
Rated AC output current[7]	11.6A	14.5A
Rated AC voltage	3 / N / PE, 220 / 380 V; 230 / 400 V; 240 / 415 V	
AC voltage range	270 - 480 Vac	
Rated grid frequency	50Hz	
Grid frequency range	45 – 55Hz	
Harmonic THD	< 3 % (of rated power)	
DC current injection	< 0.5 % In	
Power factor at Rated power / Adjustable power factor	> 0.99 / 0.8 leading to 0.8 lagging	
Feed-in phases/connection phases	3 / 3	
Backup Data (on grid mode)		

Parameters	SH8.0RT-20	SH10RT-20
Max. output power for backup load	16500W	
Max. output current for backup load	3*25A	
Backup Data (off- grid mode)		
Rated voltage	3 / N / PE, 220 Vac / 230 Vac / 240 Vac	
Rated backup output current[7]	11.6A	14.5A
Rated frequency	50 Hz	
THDV(@Linear load)	2%	
Backup switch time	< 20 ms	
Rated output power	8000 W / 8000 VA	10000 W / 10000 VA 9999 W / 9999 VA for Australia
Peak output power [4]	12000 W / 12000 VA□ 5min	12000 W / 12000 VA,5min
Peak output power on single phase [5]	2700 VA (≥12.8kWh)	3400 VA (≥12.8kWh)
Rated output current for backup load during on grid mode	3 x 18.5 A	
Efficiency		
Max. efficiency / European efficiency	98.4% / 97.9%	98.4% / 97.9%
Protection&Function		
Grid monitoring	Yes	
DC reverse polarity protection	Yes	
AC short-circuit protection	Yes	
Leakage current protection	Yes	

Parameters	SH8.0RT-20	SH10RT-20
DC switch (solar)	Yes	
DC Overcurrent Protection (Battery)	Yes	
Surge Protection	DC Type II / AC Type II	
Parallel operation on grid port / Max. No. of inverters	Master-slave mode / 2 [6]	
Battery input reverse polarity protection	Yes	
Protective Class	I	
Overvoltage Category	DC II/AC III	
Active Anti-Islanding Method	Frequency Shift	
General Data		
Max. efficiency	98.4 %	98.4 %
European efficiency	97.9 %	97.9 %
Topology (solar / battery)	Transformerless / Transformerless	
Degree of protection	IP65	
Operating ambient temperature range	-25 ℃ - 60 ℃	
Allowable relative humidity range (Non-condensing)	0 - 100 %	
Cooling method	Natural convection	
Max. operating altitude	4000 m	
Noise (Typical)	30 dB(A)	
Display	LED	
Communication	RS485, WLAN, Ethernet, CAN, 4 × DI, 1 × DO	
DC connection type	MC4 (PV, Max.6mm²) / Evo2 Compatible (Battery, Max.6mm²)	

Parameters	SH8.0RT-20	SH10RT-20
AC connection type	Plug and play connector (Grid Max.10mm², Backup Max.6mm²)	
Country of manufacture	China	
Mechanical Data		
Dimensions (W x H x D)	460 mm x 540 mm x 170 mm	
Mounting method	Wall-mounting bracket	
Weight	27 kg	

1. Input voltage exceeding the MPPT operating voltage range triggers inverter protection.

2. The output voltage of strings should all exceed the lower limit of the full load MPPT voltage range.

3. Depending on the connected battery. The maximum charging/discharging current is 20A when used with the SBR064 battery system.

4. Can be reached only if PV and battery power is sufficient.

5. Peak power only for Resistive loads. Detail refer to SHRT backup output power document.

6. Germany is available for 2 inverters parallel in maximum if no ripple control is used in system.

7. These values are only applicable in Australia.

11.2 The Compatibility for Backup under Off-grid Scenario

The information below is about the compatibility for backup of SUNGROW SH5.0–10RT / SH5.0–10RT-20 inverter under off-grid scenario. Please refer to this information before you use the back-up model of the four inverters under off-grid situation.

Main electrical panel

Type	Load Power			
	SH5.0RT/ SH5.0RT-20	SH6.0RT/ SH6.0RT-20	SH8.0RT/ SH8.0RT-20	SH10RT/ SH10RT-20
Dust collector	1 kW	1 kW	1 kW	1.3 kW
Water heater / Kettle / Iron /	1.5 kW	1.8 kW	2.4 kW	3 kW (2.5 kW with SBR096)

Type	Load Power			
	SH5.0RT/ SH5.0RT-20	SH6.0RT/ SH6.0RT-20	SH8.0RT/ SH8.0RT-20	SH10RT/ SH10RT-20
Oven / Toaster / Geothermal blanket / Rice cooker				
Microwave oven	1 kW	1 kW	1.3 kW	1.5 kW
Refrigerator	1 kW	1 kW	1 kW	1 kW
TV / Computer	1 kW	1 kW	1 kW	1 kW
Bath heater	1 kW	1.5 kW	2 kW	2.5 kW
Fluorescent / LED lights	1 kW	1 kW	1 kW	1.3 kW
Electric fan / Ceiling fan	1 kW	1.2 kW	1.6 kW	2 kW

Additional large appliances

Type	SH5.0RT/ SH5.0RT-20	SH6.0RT/ SH6.0RT-20	SH8.0RT/ SH8.0RT-20	SH10RT/ SH10RT-20
Conditioner (Frequency conversion)	1P	1P	1P	1.5P

The data of the compatibility for backup of SH5.0–10RT / SH5.0–10RT-20 are based on the test with SUNGROW SBR096/128/160/192/224/256 batteries (-20 ~ 53 ℃, 5~100% SOC). For the actual application, please refer to the maximum output capacity of the battery used. If the inverter is used with an SBR064 battery, please consult SUNGROW for the compatibility information.

For those loads that not covered in this document, please contact SUNGROW to make sure the compatibility of the specific loads under off-grid scenario. SUNGROW will not be held responsible for the usage of any load without confirmation. We will keep updating this document, please contact SUNGROW if there are any relevant issues.

11.3 Quality Assurance

When product faults occur during the warranty period, SUNGROW will provide free service or replace the product with a new one.

The software security update period for this product aligns with the warranty period. During the warranty, security patches or updates will be provided if any vulnerabilities or compatibility issues are identified.

Evidence

During the warranty period, the customer shall provide the product purchase invoice and date. In addition, the trademark on the product shall be undamaged and legible. Otherwise, SUNGROW has the right to refuse to honor the quality guarantee.

Conditions

- After replacement, unqualified products shall be processed by SUNGROW.
- The customer shall give SUNGROW a reasonable period to repair the faulty device.

Exclusion of Liability

In the following circumstances, SUNGROW has the right to refuse to honor the quality guarantee:

- The free warranty period for the whole machine/components has expired.
- The device is damaged during transport.
- The device is incorrectly installed, refitted, or used.
- The device operates in harsh conditions beyond those described in this manual.
- The fault or damage is caused by installation, repairs, modification, or disassembly performed by a service provider or personnel not from SUNGROW.
- The fault or damage is caused by the use of non-standard or non-SUNGROW components or software.
- The installation and use range are beyond stipulations of relevant international standards.
- The damage is caused by unexpected natural factors.

For faulty products in any of above cases, if the customer requests maintenance, paid maintenance service may be provided based on the judgment of SUNGROW.

> Product data such as product dimensions are subject to change without prior notice. The latest documentation from SUNGROW should take precedence in case of any deviation.

11.4 Contact Information

In case of questions about this product, please contact us. We need the following information to provide you the best assistance:

- Model of the device
- Serial number of the device
- Fault code/name
- Brief description of the problem

For detailed contact information, please visit: **https://en.SUNGROWpower.com/contactUS**

Sungrow Power Supply Co., Ltd.

www.sungrowpower.com